INTERTRON INDUSTRIES, INC.

SINGLE PHASE RESISTANCE WELDER
MICROPROCESSOR CONTROLLER
MODEL 108 AND 108A
OPERATING MANUAL

REFERENCE MANUAL

REV. I APRIL 19, 1999 **www.intertron-ind.com**

Contents

INTERTRON INDUSTRIES INCORPORATED WARRANTY 1
INTRODUCTION 2
FRONT PANEL PROGRAM SETTINGS 3
AUXILIARY FUNCTIONS 4
108A STEPPER FUNCTIONS 4
SWITCHABLE FUNCTIONS 5
MODES OF OPERATION 5
PROGRAMMING 6
UPSLOPE PROGRAMMING AND OPERATION 8
UPSLOPE PROGRAMMING AND OPERATION 9
SEAM/ROLL SPOT 11
MODEL 108A STEPPER FUNCTIONS 11
CASCADE OPERATION 12
CASCADE VALVE RELAY OPERATION 14
MANUAL 1-5 VALVE SELECT PROGRAM 15
BUTT-WELD MODE 16
RETRACTION AND TIP DRESS 16
ANTI-TIE DOWN MODE 16
WELD SCHEDULE SELECTION BY FOOT SWITCH 17
FORGE DELAY TIME 18
INSTALLATION INSTRUCTIONS 19
- PRESSURE SWITCH CONNECTION 20
- PERIPHERAL DIAGNOSTICS 21
- OPERATING MODE SETTINGS 22
- UNDER VOLTAGE LINE MONITOR 22
- POWER UP PROTECTION 22

MODEL 108 CONTROLLER APPLICATION HINTS AND SPECIAL APP. DRAWINGS ... 23
- MODEL 108 WELD CONTROL SET UP SHEET 24
- UPSLOPE CALCULATIONS & SETTINGS FOR MODEL 108 WELDING CONTROL . 25
- MULTIPLE PULSE SETTINGS 26
- PULSATION & QUENCH - TEMPER OPTIONS FOR MODEL 108 CONTROLS 27
- QUENCH AND TEMPER CONTROL SETTINGS 28
- ELECTRONIC PRESSURE REGULATION AND MOTOR SPEED CONTROL 29
- HI - LOW LIMIT WELD CYLINDER PRESSURE SENSOR 30

PC TO MODEL 108 RS232 COMMUNICATION 31
- STEPPER DATA ENTRY 34
- COPY WELD DATA FROM ONE SCHEDULE TO ANOTHER 34
- FILE COMMANDS 34
- UPLOADING AND DOWNLOADING WELD SCHEDULES 36
- PLC CONTROL SIMULATION ON THE PC 37
- 108 STEPPER FUNCTIONS 38
- WELD SCHEDULE MEMORY RESET 38
- WELD SCHEDULE EDIT LOCKOUT KEY 38
- ELECTRONIC PRESSURE REGULATOR AND AIR VOLUME BOOSTER CALIBRATION 39

SCHEMATICS 40

INTERTRON INDUSTRIES
INCORPORATED WARRANTY

The Single Phase Resistance Welder Controller Model 108 has a limited warranty of one year parts and labor, FOB, Santa Ana, California, from the date of purchase. During that period, upon prepaid return to the distributor or the factory, equipment proving to be defective will be repaired (or at our option, replaced) without charge for either material or labor. No responsibility will be assumed for damage to equipment through improper installation, or through attempts to operate it above its rated capacity, intentional or otherwise.

The SCR's used in the ignitron firing module or SCR contactors are warranted for 90 days, if correct installation procedures are used.

***WARRANTY EXTENSION, as of May 01, 2001 the limited warranty of one year parts and labor has been extended to THREE years. Any items purchased prior to May 01, 2001 retains the limited warranty of one year parts and labor. In addition, the warranty for the SCR's used in the ignitron firing module or SCR contactors has been extended from 90 days to ONE year, if correct installation procedures are used.**

In addition, the warranty does not cover any customer equipment to which the Model 108 is installed.

INTRODUCTION

Intertron Industries Incorporated Resistance Welding Controller Model 108 is an upgrade of the Model 105 Microprocessor Welding Control. The sophistication of today's electronics is used to simplify the welder's operating procedures and logistic of operations. The computer powers are used to greatly enhance the flexibility of programming and storing welding programs. The Model 108 can store up to 300 weld schedules. In the following pages we will attempt to give the user a working knowledge of the control system and its parameters.

CAUTION: Please read the installation instructions carefully prior to installation.

FRONT PANEL PROGRAM SETTINGS

Weld schedules A00-A99; B00-B99; C00-C99	
SQUEEZE DELAY TIME	00-99 CYCLES
SQUEEZE TIME	00-99 CYCLES
IMPULSES	00-99
COOL TIME	00-99 CYCLES
HEAT TIME	00-99 CYCLES
HEAT%	00-99
QUENCH TIME	00-99 CYCLES
TEMPER TIME	00-99 CYCLES
TEMPER%	00-99
HOLD TIME	00-99 CYCLES
OFF TIME	00-99 CYCLES
UPSLOPE STEPS	00-99
%HEAT PER STEP	0.0-9.9

HEAT TIME 00 = 1/2 CYCLE ALTERNATE POLARITY

REPEAT: Repetitive sequence

WELD: Activates contactor during weld sequence

SEAM: Cool-heat sequence

ROLL SPOT: Roll Spot with clutch/brake on/off control

AUXILIARY FUNCTIONS

*1 CASCADE IN CHAINED MODE

*2 CASCADE IN SUCCESSIVE MODE

*3 CONSTANT CURRENT MODE

*4 SET 00-99 PSI WELD PRESSURE

*5 SET 00-99 PSI FORGE PRESSURE

*6 SET 00-99 PSI HI-LO LIMIT ±1PSI

*7 SET 00-99 MOTOR SPEED

*8 SET 00-99 CYCLES FORGE DELAY TIME

*9 MANUAL VALVE SELECT PROGRAM

108A STEPPER FUNCTIONS

**1 % HEAT PER STEP

**2 WELDS PER STEP X 1

**3 WELDS PER STEP X 10

**4 TOTAL STEPS

SWITCHABLE FUNCTIONS

1.) SPOT

2.) SEAM

3.) ROLL SPOT

4.) CASCADE IN CHAINED OR SUCCESSIVE MODE

5.) BUTT-WELD

6.) FOOT SWITCH OR ANTI-TIE DOWN MODE

7.) PLC CONTROL VIA RS232

8.) GROUP A WELD SCHEDULES 00-99

9.) GROUP B WELD SCHEDULES 00-99

10.) GROUP C WELD SCHEDULES 00-99

11.) MANUAL VALVE SELECT PROGRAM

MODES OF OPERATION

1.) BUTT-WELD MODE

2.) INTERLOCK SCANNER CONTROL

3.) WELD SCHEDULE SELECTION BY FOOT SWITCH

4.) ANTI-TIE DOWN DUAL PALM BUTTON MOMENTARY ACTION

5.) ANTI-TIE DOWN DUAL PALM BUTTON PUSH AND HOLD

6.) AUTOMATIC VOLTAGE COMPENSATION OR CONSTANT CURRENT

PROGRAMMING

•Set the toggle switch to Weld Schedule Group A. Key in a weld schedule number from 00 to 99. LED's squeeze delay time through off time shall be off. This is a typical STAND BY mode condition.

•The position of the toggle switches REPEAT, WELD, and SEAM/ROLL do not matter for the purposes of setting up a Weld Schedule.

•The keyboard has 10 digits (0-9) plus a * key and a RED key.

•The * key returns the program to the STAND BY mode. The RED key steps the sequence from SQUEEZE DELAY TIME through %HEAT PER STEP and back to the STAND BY mode. Keys *1 through *9 turn on auxiliary functions.

•By pushing the RED key the first time, the sequencer will exit to SQUEEZE DELAY TIME. It should be noted that the SQUEEZE DELAY TIME lamp is **on**. Also, the two digit display is now showing a two digit value. If it is not showing a two digit value, one must be entered at this time.

•SQUEEZE DELAY TIME occurs only once in a repeat cycle in the first sequence, it will not repeat again for the duration of the foot switch closure. It is recommended that if REPEAT is not used, set SQUEEZE DELAY TIME to zero.

•SQUEEZE DELAY TIME in BUTT-WELD MODE is used to delay the initiation of the UPSET valve upon initiation of the second stage foot switch, thus causing a delay time between the clamp and upset valve. SQUEEZE DELAY TIME has a minimum built in time of one cycle for safety reasons.

•SQUEEZE TIME must be set to the minimum time required to insure that the welding tips are under pressure prior to welding.

•IMPULSES must be set to a minimum of one. It is a multiplier for COOL TIME + HEAT TIME.

•COOL TIME is used when more than one impulse is required, allowing the weld nugget to cool before it is reheated again.

•HEAT TIME is the length of time the heat is being applied. HEAT% is the amount of heat applied. When HEAT TIME is set to 00 the controller will put only one half cycle of heat per impulse, alternating each time in the opposite direction of previous one half cycle.

•Both HEAT TIME and HEAT% can be accessed directly by pushing the RED and GREEN keys located adjacent to these functions. After editing these functions, push the * key to exit back to STAND BY mode.

•QUENCH TIME allows the weld nugget to cool.

•TEMPER TIME and TEMPER% function in the same way as the HEAT TIME and HEAT%. They are used to anneal the weld so that cracking may be prevented.

•HOLD TIME is programmable from 0-99 cycles.

•In REPEAT MODE, **off time** is programmable to a value other than zero. This allows the electrodes to separate. The operator can position the material for the next weld while the foot switch is held closed.

•UPSLOPE STEPS must be set to zero when slope is not being used.

•HEAT% PER STEP is to be set to zero when slope is not used.

UPSLOPE PROGRAMMING AND OPERATION

•Upslope is defined as a stair step ladder where HEAT% is incremented, from an initial value, in small increments and over a specified period of time. (See figure 1)

•A unit of time (selected from 1-99) is composed of two alternating cycles of electrical current, one positive and one negative.

•A program of 01 HEAT TIME at a heat magnitude of 50% will cause the welder controller to pass to the welding transformer one positive and one negative half cycle of electrical current, both with a magnitude of 50%. (See figure 2)

•The welder controller can be programmed to increase the initial value of HEAT% (value set in the first impulse and in the first cycle of HEAT TIME.) The heat will be incremented in one cycle per step for the total amount of steps programmed in UPSLOPE STEPS.

•The HEAT% per step can be set in fractions of a % from 0.0 to 9.9.

•The total number of steps shall always be equal to or less than the total number of heat cycles in HEAT TIME.

NOTE: Enter Initial HEAT% in program location "HEAT%"
Enter Total Number of Steps
Enter % HEAT per Step

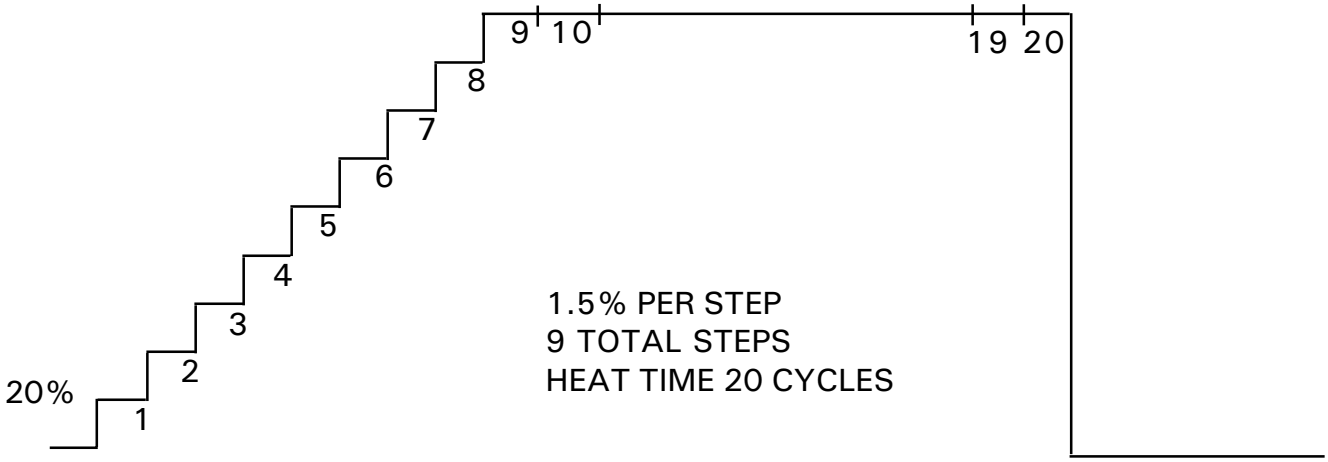

FIG. 1

UPSLOPE PROGRAMMING AND OPERATION

The upslope feature cannot be used with TEMPER TIME. The illustration in Figure 3 shows a weld schedule using upslope and the relationship between units of HEAT TIME, IMPULSES, STEPS UPSLOPE HEAT INCREASE, and ALTERNATE POSITIVE/ NEGATIVE HALF CYCLES of ELECTRICAL CURRENT. Figure 3 will be used to show how the slope is calculated from basic requirements in easy steps:

1.) 3 impulses: 3 cycles of heat time per impulse
2 cycles of cool time per impulse

2.) Slope shall start at 20% heat, increase in 6 cycles of heat time to 50% and continue at a consistent 50% for the remaining 3 cycles of heat time in the third impulse.

3.) Set up: Set IMPULSE counter to 03
Set COOL TIME counter to 02
Set HEAT TIME counter to 03
Set HEAT% counter to 20

4.) Calculate and set UPSLOPE STEPS counter UPSLOPE STEPS = HEAT TIME in cycles, 6 cycles of UPSLOPE = 6 UPSLOPE STEPS.
Set UPSLOPE STEPS counter to 06.

5.) Calculate and set HEAT% per step counter.

$$\frac{\text{(Ending HEAT\%) - (Starting HEAT\%)}}{\text{UPSLOPE STEPS}} = \text{HEAT\% PER STEP}$$

$$\frac{\text{(50\%) - (20\%)}}{\text{6 steps}} = \frac{\text{5.0\% PER STEP}}{\text{1}}$$

Set HEAT% per step to 5.0

shows a weld schedule using upslope and the relationship between units of HEAT TIME, IMPULSES, STEPS UPSLOPE HEAT INCREASE, and ALTERNATE POSITIVE/

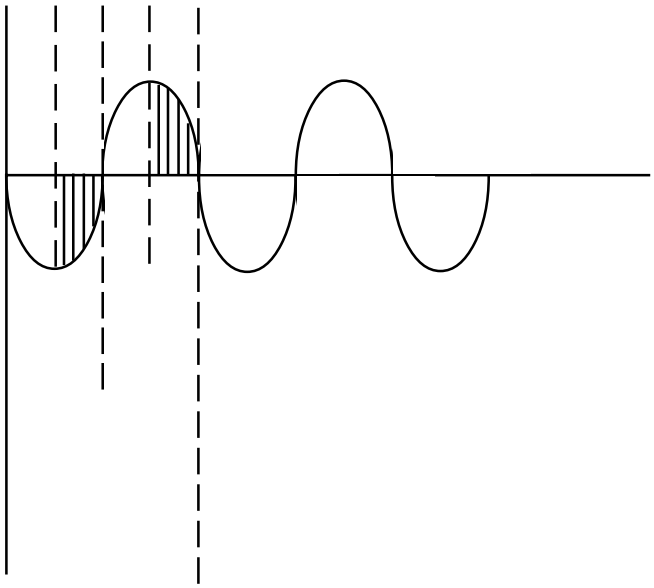

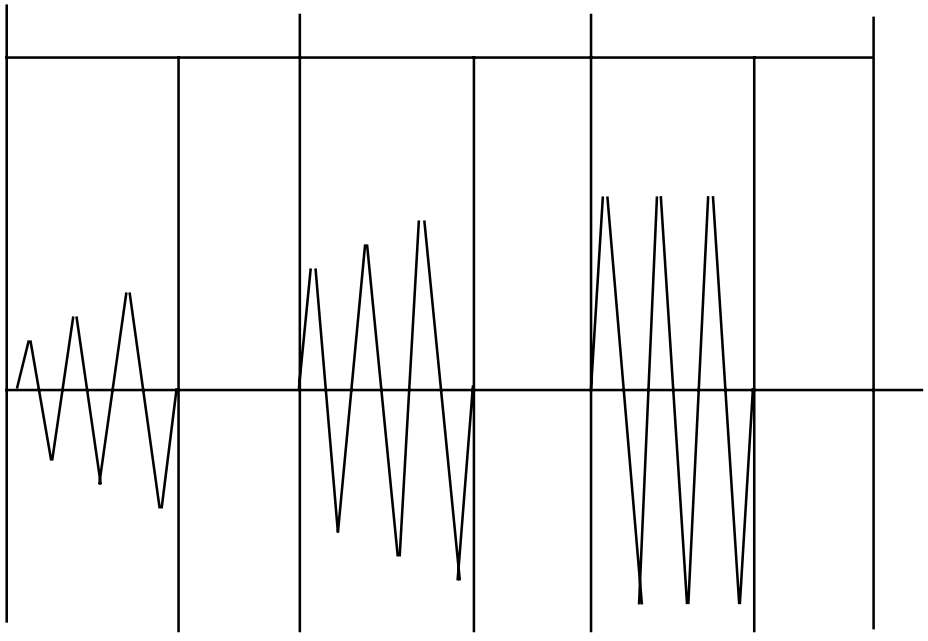

SEAM/ROLL SPOT

•In the SEAM mode, the sequencer will step through SQUEEZE to the first impulse and do a COOL TIME/HEAT TIME sequence continuously until the foot switch is released, then step to HOLD TIME and OFF TIME.

•A motor clutch/brake and motor on/off control output provides 110 VAC to energize the motor at the first impulse.
In ROLL SPOT mode, the output will energize the motor during OFF TIME when the foot switch is depressed.

MODEL 108A STEPPER FUNCTION

•In order to compensate for current concentration decay due to the flattening of the tips during weld, the stepper function allows the operator to progressively increase heat % in weld time.

•From standby mode push **1. Key in an increase of 0.0 to 9.9% per step.

•A step is comprised of a number of welds.
**2 will allow keying in 01 to 99 welds per step
**3 will allow keying in 10 to 990 welds per step.
**2 and **3 are mutually exclusive functions. Only one or the other may be entered.

•**4 allows keying in the number of steps that are to be performed prior to changing tips.

•The controller will halt, the number 88 will flash in the display window and a buzzer may be energized, alerting the operator to that condition.

•Emergency stop input will reset the counter.

All stepper parameters are retained in memory for each weld schedule, exclusive of the total remaining steps left to be executed. Whenever power is turned off, this number is lost. On power up the initial "TOTAL STEPS" is restored in memory.

CASCADE OPERATION

Cascade mode operation is enabled by turning on the minidip switch S5-1 on the processor board. Cascade is defined as a sequence of weld schedules turning on sequentially six welding guns or six welding transformers, one per weld schedule.

Weld schedules 1 through 6, 21 through 26, ------- 91 through 96 in groups A, B, or C may be used for cascading purposes.

Weld schedule X1 will turn on valve 1 or transformer 1
Weld schedule X2 will turn on valve 2 or transformer 2
Weld schedule X3 will turn on valve 3 or transformer 3
Weld schedule X4 will turn on valve 4 or transformer 4
Weld schedule X5 will turn on valve 5 or transformer 5
Weld schedule X6 will turn on valve 6 or transformer 6

The clamp valve will stay on from the beginning of the first weld schedule through the last weld schedule in the selected group.

A weld schedule will link itself to the next one in a cascade group in two modes:

A. CHAINED MODE
B. SUCCESSIVE MODE

CHAINED MODE.
CHAINED mode implies that once the first weld schedule in the group is activated, all subsequent weld schedules in the group will automatically be activated in the proper sequence.
Key in *1 in the STAND BY mode to turn on the LED marked *1. Now the next weld schedule will be executed at the end of the first one. The last weld schedule in the sequence does not have to have the "CHAINED" LED on. At the end of the last weld schedule to be executed the controller will return to the STAND BY mode with the display showing the first weld schedule in that group.
Turning on the "CHAINED" LED in weld schedule 06 will cause that weld schedule to be linked to weld schedule 11 in the next group.
If "OFF" time is set for a minimum of one cycle time in the last weld schedule, the "OFF" output will turn on for that duration. This output may be used to indicate end of sequence or as a clock for a part counter.

SUCCESSIVE MODE.

The CASCADE SUCCESSIVE mode operates in a similar fashion to the CHAINED mode. The difference is that in the SUCCESSIVE mode the controller will halt at the end of "OFF" time of every weld schedule in the sequence. A new initiation by the foot switch, palm button or PLC interface will cause the controller to advance to the next weld schedule in the group. To create a link between weld schedules in the successive move, the *2 LED must be turned on. To turn that LED on or off the *2 keys must be depressed.

Note: A group of CASCADE weld schedules may be set with a mixture of CHAINED and SUCCESSIVE instructions.

The same weld schedule numbers in group A, B or C may be activated by 3 independent foot switches.

Weld schedules with the least significant digit being 0, 7, 8 and 9 may be used as non cascade weld schedules; however, they will always activate squeeze valve #1 and transformer #1. They could not be set in a cascade mode.

CASCADE may also be used in the BUTT WELD mode, by turning on the switch S5-4 on the processor board. The clamp and upset valve will be common to all butt welders. The transformers will fire in sequence.

CASCADE VALVE RELAY OPERATION

1.) •The CLAMP VALVE will be energized up on the first stage foot switch closure FS1 and released when the foot switch is released.

•If FS1 is not released and the 2nd stage foot switch is closed momentarily, the clamp valve will latch on and remain energized throughout the full sequence of the weld schedule 1, 2, 3, 4, 5, and 6. The clamp will be released at the end of weld schedule 6 of the last group in the cascade sequence.

2.) At the beginning of the squeeze time of weld schedule 1 an output SQ1 will energize a valve to operate Gun#1. This valve will remain energized until the end of the HOLD TIME of weld schedule 1. An additional output called FM1 is available to energize a welding transformer only from that weld schedule.

3.) •At the end of weld schedule 1, weld schedule 2 will begin. An output called SQ2 will energize a valve to operate Gun#2.
•This valve will remain energized until the HOLD TIME of weld schedule 2. An additional output called FM2 is available to energize a second welding transformer, but only from weld schedule 2.

4.) At the end of weld schedule 2, weld schedule 3 will begin. An output called SQ3 will energize until the end of HOLD TIME of weld schedule 3. An additional output called FM3 is available to energize a third welding transformer, but only from weld schedule 3.
The sequence of operation in the above sections 2, 3, and 4 will repeat itself for weld schedules 4, 5, and 6. At the beginning of weld schedule 4 the motor output relay will turn on and stay on through weld schedule 6. That output is intended to turn on a relay. That relay will switch the common line of the gun valves 1, 2, and 3 to the common line of gun valves 4, 5, and 6. The same holds true for the common line of firing modules 1, 2, 3 and 4, 5, 6.

5.) For installation details see drawing No. 155-019-01A and 155-019-018.

MANUAL 1-5 VALVE SELECT PROGRAM

In the cascade mode, valve relay outputs SV3, SV4, SV5, SV6, and SV7 are automatically turned on in the appropriate sequence, one for each of the selected weld schedules with the least significant digit 1 through 6. In applications requiring more than one valve to be energized at one time, to be used as additional gun valve or clamp or as shift cylinder or as ejector pin cylinder, the manual valve select program must be initiated. This operating mode is enabled by turning on the minidip switch SW7-3 on the processor board. With that switch turned on, no valve outputs will be energized unless so designated in the manual valve select program.

•From the stand by mode push keys *9.

•The front panel LED labeled *9 will flash.

•The display will show digits 10.

•By pushing the red key the display will be changed to 20, 30, 40 and 50.
The most significant digit indicates selection of valves 1 through 5.
1 = SV3; 2 = SV4; 3 = SV5; 4 = SV6 and 5 = SV7.

•As the valves display are scrolled from 10 through 50 via the red key, the least significant digit may be changed from 0 to 1 or 2 or 3.
0 = valve not active
1 = valve active from squeeze through hold time
2 = valve active from squeeze through off time
3 = valve active during off time only

•After setting the operating mode from 0 to 3 to all five valves, push the * key to return to stand by mode.

•Repeat the valve selection process for all the weld schedules in the cascade group. All the selections will be stored together with all other weld parameters in the Model 108 memory.

Note: The manual valve select program is also operative in standard spot-seam-roll spot mode. The pre-specified valve operation for forge valve and motor will occur concurrently with the manual selection.

BUTT-WELD MODE

This mode is set up by turning on the minidip switch S5-4. The clamp valve may be turned on or released with the "first stage" of the foot switch. The second stage foot switch turns on the upset output delayed by the number of cycles of time set in SQUEEZE DELAY TIME. The sequence starts and the upset valve is turned off at the end of HOLD TIME. The clamp stays on until the end of the weld sequence.
•The Interlock input in butt-weld may be used, via a switch, to exit HEAT TIME and enter QUENCH TIME. See drawing No. 155-018-01A. The scanner operation is disabled in this mode.

RETRACTION AND TIP DRESS

•A RETRACTION RELAY output is also available to operate a retraction valve for Spot, Seam and Roll Spot.

•A TIP DRESS relay output is also available to provide reduced air pressure for tip dressing in Spot and also energize motor in Seam or Roll Spot at the same time. A terminal strip is available to connect switches to energize all valves independently during set up.

•All outputs except for SQ1 are factory installed options. It is suggested that the controller brain panel and peripheral board be returned to the factory for upgrading, when that becomes a requirement.

INTERLOCK

The controller will interface directly with the 10 station Interlock Scanner Model 375. When enabled it will wait at the end of squeeze time for an enable signal from the scanner to let the next controller in line to start welding. The Interlock is enabled by minidip switch S5-3.

ANTI-TIE DOWN MODE

On the 108 processor board, set the minidip switch SW7-1 to on for a "MOMENTARY PUSH" action of FS1 and FS2.
On the 108 processor board, set the minidip switch SW7-2 to on for a "PUSH AND HOLD" action of FS1 and FS2.
FS1 and FS2 inputs are to be connected to two (momentary on) palm buttons. Palm button switches must be activated within .75 seconds of each other.
Note: "MOMENTARY PUSH" ON time can be set from 1-99 cycles if "SQUEEZE DELAY TIME" is set from 1 to 99 cycles.

WELD SCHEDULE SELECTION BY FOOT SWITCH

•Typically, weld schedule selections are done by keying in a two digit number with the controller in the stand by mode. A 3 position toggle switch located on the bezel of the brain panel selects group A, B or C, each holding weld schedules 00 through 99. One of 3 foot switches will select the same weld schedule number in group A, B, or C.

EXAMPLE:
Set weld schedule number to 25.
Set A-B-C selector switch to position B.
Foot switch #1 will enable weld schedule A25
Foot switch #2 will enable weld schedule B25
Foot switch #3 will enable weld schedule C25

The same holds true when selecting a cascade group.

EXAMPLE:
Set weld schedule number to 31.
Set A-B-C selector switch to position B.
Foot switch #1 will enable weld schedules A31, A32, A33, A34, A35, A36
Foot switch #2 will enable weld schedules B31, B32, B33, B34, B35, B36
Foot switch #3 will enable weld schedules C31, C32, C33, C34, C35, C36

Note: Squeeze delay time, if initiated by foot switch, may be aborted if the foot switch closure is removed and the control returns to stand by mode. Setting the squeeze delay time to zero allows the operator to initiate squeeze delay time with "FIRST STAGE" only and abort if necessary, or initiate "FIRST and SECOND STAGE" and immediately step to "SQUEEZE TIME" where the sequence is locked on.

EMERGENCY STOP
This is a momentary switch which is normally closed. When incorporated in the system, the foot switch common line which is normally connected to TB1-13 on the peripheral board, must be disconnected and reconnected to the emergency stop switch as shown in the installation diagrams.

FORGE DELAY TIME

From standby mode, push keys *8 on the front panel. The LED adjacent to *8 will flash. Key in a number from 01 to 99 for "FORGE TIME DELAY". Push the * button to return to standby mode. Forge delay time counter starts counting line frequency cycles from the beginning of the first heat impulse. At the end of count down, a forge designated relay "SV7" will turn on and stay on until "END" of hold time. "00" in forge delay will make that function inactive.

INSTALLATION INSTRUCTIONS

Mount the controller cabinet to the side metal wall of the welding machine. Connect 2 wires from the power input fuses F1 and F2 to the 380VAC input power disconnect switch in the welding machine.

•Use DWG. 155-017-01A; 155-018-01A; 155-019-01A as a reference. The power transformer T1 has 5 taps on the primary side. A metallic sticker on the transformer shows the tap arrangement and physical location. Taps to set are 200V-220V-440V-480V.

•The transformer 110V secondary output has a total capacity of 150VA to be used with the designated loads as specified for the Model 108. All valves have typically a 110V/20VA solenoid coil. If the 110V source is to be used to operate an external load switched on/off b a mechanical switch, a 0.1 MF/600VAC capacitor must be used across the switch. If this is not done, electrical noise generated by the switch will interfere with the controller operation.

CHART OF SOLENOID VALVE INTERCONNECT

1.) SV com	TB2-8	Common to all valves
2.) SV 1	TB2-1	Tip Dress Valve
3.) SV 2	TB2-2	Retraction Valve
4.) SV 3	TB2-3	SQ1
5.) SV 4	TB2-4	SQ2
6.) SV 5	TB2-5	SQ3
7.) SV 6	TB2-6	Motor/Clutch Relay
8.) SV 7	TB2-7	Clamp Valve/Forge

Note: The switches will be switching 5VDC/20MA

CHART OF SOLENOID VALVE MANUAL TRIGGER SWITCHES	
1.) SW com. (Gnd.)	TB1-23
2.) SW Retraction Valve	TB1-24
3.) SW Tip Dress Valve	TB1-25
1.) SW com. (Gnd.)	TB3-1
2.) SW SQ3 Valve	TB3-2
3.) SW SQ2 Valve	TB3-3
4.) SW SQ1 Valve	TB3-4

To energize one welding transformer, one firing module is connected to TB1-18 and 19. (Observe Polarity) To energize 3 transformers in the Cascade mode, 3 firing modules are connected TB3-5; 6; 7; 8; 9; AND 10. See drawing No. 155-019-01B for 6 transformer firing module interconnect diagram.

PRESSURE SWITCH CONNECTION

Terminal strip TB1-10 and TB1-11 are to be connected to the (a) N.O. pressure switch. After the closure of the first stage foot switch FS1, the controller will lock in the squeeze valve until the pressure switch is closed. Then it will allow the sequence to start if FS2 is also closed.

A normally closed temperature switch is connected across TB1-11 and TB1-12. This switch is connected in series with the pressure switch described above.

PERIPHERAL DIAGNOSTICS

On the brain panel there is a row of red lamps L.E.D. in a rectangular package called LM1. When either one is lit, it has the following indication:

1.)	PS/TS	Pressure switch and thermal switch are closed.
2.)	FS1	Foot switch first stage switch is closed.
3.)	FS2	Foot switch second stage switch is closed.
4.)	Clamp SOL.	Computer is turning on the clamp relay.
5.)	SQ1 SOL.	Computer is turning on the squeeze 1 relay.
6.)	SQ2 SOL.	Computer is turning on the squeeze 2 relay.
7.)	SQ3 SOL.	Computer is turning on the squeeze 3 relay.
8.)	MOTOR	Computer is turning on the motor relay.
9.)	SCAN OUT	Computer is turning on the INTERLOCK output.
10.)	OFF OUT	Computer is turning on the OFF TIME output.
11.)	LED 17	Computer is receiving signal from Interlock scanner to start welding.
12.)	LED 18	Computer is generating pulses to energize the firing module.

OPERATING MODE SETTING

On the brain panel is a 4 minidip switch module labeled S5 for setting the operating mode.

S5-1		S5-2		Operating Mode
OFF	:	OFF	:	SPOT WELD
OFF	:	ON	:	SEAM/ROLL SPOT
ON	:	OFF	:	CASCADE

S5-3	ON	Enables Interlock
S5-4	ON	Enables BUTT-WELD MODE
SW7-1	ON	Enables ANTI-TIE DOWN push momentary on
SW7-2	ON	Enables ANTI-TIE DOWN push and maintain
SW7-3	ON	Enables MANUAL VALVE SELECT program

87 DEGREE FIRING LIMIT is active only for the first heat cycle after SQUEEZE TIME.

UNDER VOLTAGE LINE MONITOR

Comparator Q1 will automatically halt the controller, if the line voltage dips below a safe operating limit. Typically there is a 20% line voltage drop margin with no effect on the power line monitor.

POWER UP PROTECTION

The controller's computer monitors the foot switch condition on power up, and if it finds it to be closed, it will inhibit operation. It will also flag the operator by inserting the number 88 in the display window. Simply release the foot switch and proceed welding.

MODEL 108 CONTROLLER

APPLICATION HINTS AND SPECIAL

APPLICATION DRAWINGS

MODEL 108 WELD CONTROL SET UP SHEET

GROUP A, B, C SELECTED BY FOOT SWITCH #1, #2, #3
USE TOGGLE SWITCH TO SET #A, #B, #C (PROGRAMS PER SWITCH SELECTION)

JOB # _____ DATE: _____

FUNCTION	GROUP A	GROUP B	GROUP C
WELD SCHEDULE NUMBER	_____	_____	_____
SQUEEZE DELAY	_____	_____	_____
SQUEEZE TIME	_____	_____	_____
IMPULSE	_____	_____	_____
COOL TIME	_____	_____	_____
HEAT TIME	_____	_____	_____
HEAT %	_____	_____	_____
QUENCH TIME	_____	_____	_____
TEMPER TIME	_____	_____	_____
TEMPER %	_____	_____	_____
HOLD TIME	_____	_____	_____
OFF TIME	_____	_____	_____
UP SLOPE STEPS	_____	_____	_____
% HEAT /STEP	_____	_____	_____
MATERIAL 1 TYPE	_____	_____	_____
MATERIAL THICKNESS	_____	_____	_____
MATERIAL 2 TYPE	_____	_____	_____
MATERIAL THICKNESS	_____	_____	_____
UPPER TIP/WHEEL MAT & SIZE	_____		
LOWER TIP/WHEEL MAT & SIZE	_____		
SEAM/ROLL MOTOR SPEED	_____		

[*] BUTTON RESETS CONTROL TO STANDBY (USE AFTER ENTRY)
RED BUTTON STEPS THROUGH SEQUENCE (LOWER RIGHT OF KEYPAD)
GREEN BUTTON EDIT HEAT TIME PUSH * TO RESET (WINDOW DISPLAY WELD SCHEDULE)
RED BUTTON EDIT % HEAT PUSH * TO RESET (LOWER CENTER)

NOTE: RESET SELECTOR TOGGLE SWITCH TO POSITION #B FOR 3 FOOT SWITCH SELECT

(SET TOGGLE SWITCH TO POSITION #A TO LOCK ALL FOOT SWITCHES TO GROUP #A)
SET "00" IN ANY FUNCTION NOT REQUIRED)

UPSLOPE CALCULATIONS & SETTINGS FOR MODEL 108 WELDING CONTROL

UPSLOPE CONTROLS THE RATE OF HEAT APPLIED TO THE WELDING ELECTRODES. THIS GRADUAL INCREASING CURRENT EXTENDS THE LIFE OF THE ELECTRODES AND REDUCES EXPULSION AND SPLATTER. UPSLOPE IS RECOMMENDED FOR PROJECTION WELDING AND WHEN WELDING COATED MATERIALS.

FORMULA: $\frac{\text{(ENDING HEAT \% - STARTING HEAT)}}{\text{UPSLOPE STEPS}}$ = HEAT % PER STEP

$\frac{(100\% - 60\%)}{8 \text{ STEPS}}$ = 5% PER STEP

EXAMPLE NO. 1
SINGLE IMPULSE SETTING

IMPULSE = 1
HEAT TIME = 20
HEAT % = 60
UPSLOPE STEPS = 8
% HEAT/STEPS = 5

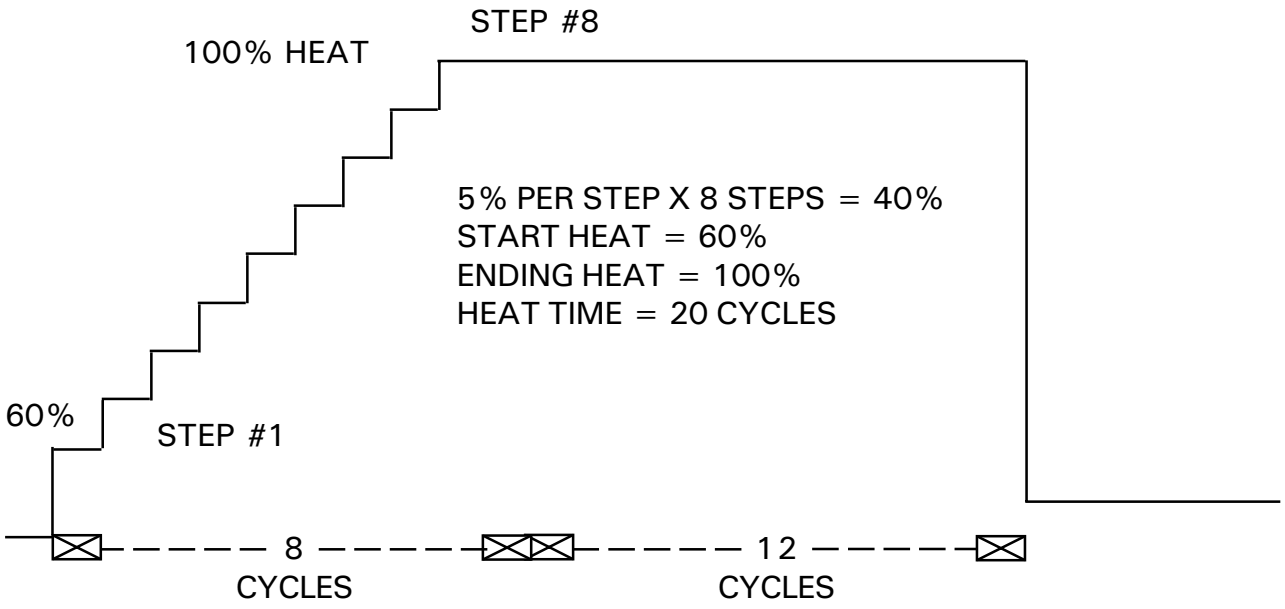

MULTIPLE PULSE SETTINGS
(SEE PAGE 8-9-10 OF OPERATING BOOK)

FORMULA: $\frac{\text{(END HEAT - START HEAT)}}{\text{UPSLOPE STEPS}}$ $\frac{(50 - 20)}{6 \text{ STEPS}}$ = HEAT % PER STEP

EXAMPLE NO. 2
MULTI-PULSE SETTING

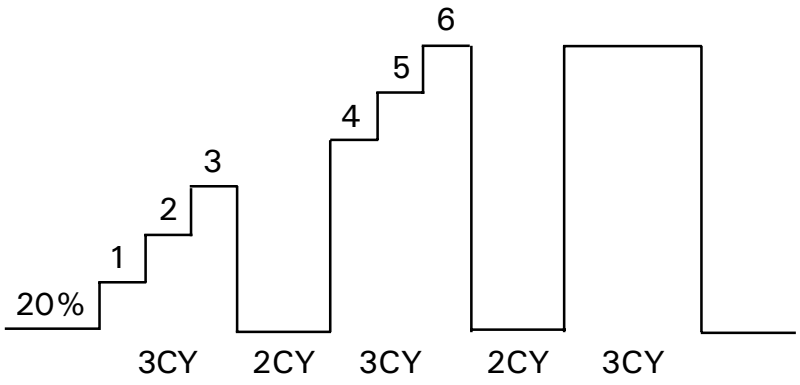

IMPULSE = 3
HEAT TIME = 3
COOL TIME = 2
HEAT % = 20
UPSLOPE STEPS = 6 "STEPS"
% HEAT = 5 "PER STEP"

THE TOTAL NUMBER OF UPSLOPE STEPS SHALL ALWAYS BE EQUAL OR LESS THAN THE TOTAL NUMBER OF HEAT CYCLES X IMPULSES.
NOTE: FOR MINOR ADJUSTMENTS IN THE CURRENT CHANGE THE MAIN "HEAT %" SETTING.

PULSATION & QUENCH - TEMPER OPTIONS FOR: MODEL 108 INTERLOCK SPOT WELD CONTROLS

PULSATION FEATURE: PROVIDES MULTIPLE IMPULSES OF WELD TIME WHICH GRADUALLY HEATS UP THICKER MATERIALS. THIS METHOD REDUCES TIP EXPULSION AND INCREASES ELECTRODE (TIP) LIFE. IT IS MANDATORY WHEN WELDING MATERIALS 1/8" OR THICKER TO USE PULSATION. USING THIS METHOD ON THIN MATERIALS RESULTS IN BETTER APPEARANCE WELDS AND REDUCES TIP WEAR.

EXAMPLE SETTINGS:
PULSATION WELD

IMPULSE = 3
HEAT TIME = 20
HEAT % = 80
COOL TIME = 5

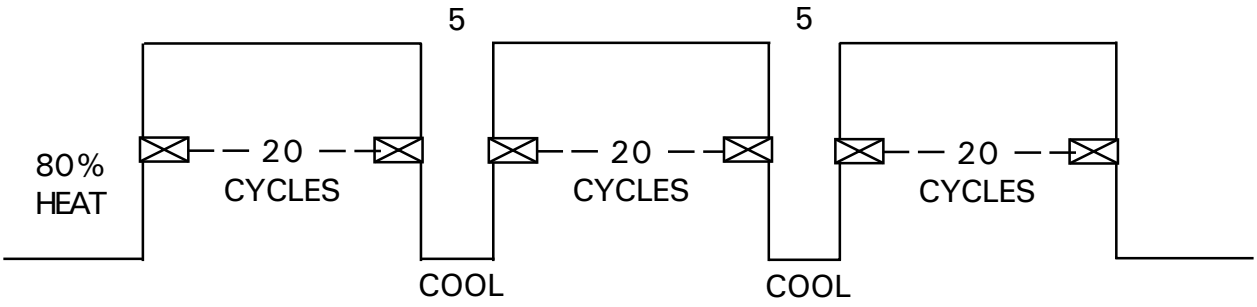

QUENCH AND TEMPER CONTROL SETTINGS

QUENCH & TEMPER: PROVIDES AN ADDITIONAL WELD CYCLE THAT IS OF LESSER MAGNITUDE THAT THE ORIGINAL, BUT APPLIED FOR A LONGER PERIOD OF TIME, WHICH ANNEALS THE WELD AREA. THIS METHOD IS RECOMMENDED WHEN HIGH CARBON STEELS ARE TO BE SPOT WELDED. (1020 CARBON ETC.)

EXAMPLE SETTINGS:

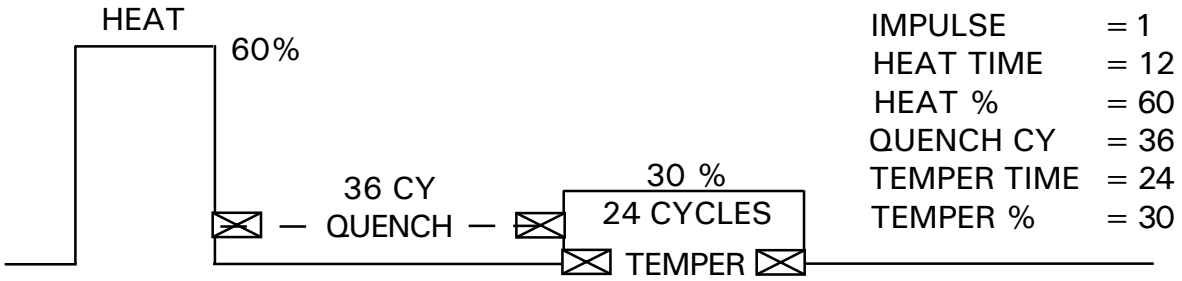

SETTING GUIDE:

QUENCH TIME	=	3 X HEAT TIME
TEMPER TIME	=	2 X HEAT TIME
TEMPER %	=	1/2 OF HEAT %

ELECTRONIC PRESSURE REGULATION AND MOTOR SPEED CONTROL

THE MODEL 108 CONTROLLER HAS THE CAPABILITY TO STORE IN ITS MEMORY, WITH EACH WELD SCHEDULE, A TWO DIGIT NUMBER FOR WELD PRESSURE, A TWO DIGIT NUMBER FOR FORGE PRESSURE AND A TWO DIGIT NUMBER FOR MOTOR SPEED CONTROL.
THESE VALUES ARE KEYED IN VIA THE 108 FRONT PANEL, BY USING THE KEYS (*4) FOR WELD PRESSURE, (*5) FOR FORGE PRESSURE AND (*7) FOR MOTOR SPEED CONTROL. THE 108 MICRO CONTROLLER SENDS THAT DATA TO THE 108 AUXILIARY BOARD, WHERE THE D/A CONVERTER U1 GENERATES AN ANALOG SIGNAL FROM 0V TO 10VDC. U1 REQUIRES NO CALIBRATION AND THE 0V TO 10V SIGNAL IS LINEAR AND DIRECTLY PROPORTIONAL TO THE PROGRAMMED VALUES OF 00 TO 99 PSIG, OR MOTOR SPEED. THAT SIGNAL IS BUFFERED THROUGH THE UNITY GAIN AMPLIFIERS U2A, U2B AND U2C.
THE DC OUTPUT MAY BE VERIFIED WITH A DC VOLTMETER AT THE FOLLOWING TEST POINTS ON THE AUXILIARY BOARD:

1. TP1 FOR WELD PRESSURE OR CONNECTOR J4-1
2. TP2 FOR FORGE PRESSURE OR CONNECTOR J4-3
3. TP3 FOR MOTOR SPEED OR CONNECTOR J4-5
4. TP5 IS SIGNAL COMMON OR CONNECTOR J4-2, 4, 6

SEE SCHEMATIC NO: 155-017A-01

AN ELECTRONIC PRESSURE TRANSDUCER MODEL T6000 AND PRE-CALIBRATED FOR 0 TO 100 PSIG IS MOUNTED IN THE REAR OF THE STANDARD 108 CABINET. ITS OUTPUT FLOW CAPACITY IS 10CFM AT 100 PSI. IT IS RECOMMENDED THAT IT BE COUPLED TO A 1 TO 1 VOLUME BOOSTER WITH A 40 CFM CAPACITY MODEL 20. AN AIR FILTER SHOULD BE USED AT THE INPUT TO PREVENT DUST AND OIL FROM PLUGGING UP THE REGULATOR.
SEE INSTALLATION DRAWING 155-017B-01
TWO REGULATORS ARE MOUNTED IN THE REAR OF THE STANDARD 108 CABINET, IF WELD AND FORGE PRESSURE ARE REQUIRED.
THE MODEL T6000 REGULATOR HAS AN OFFSET AND SPAN ADJUSTMENT FOR CALIBRATION. THESE ARE FACTORY PRESET AND NEED NOT BE READJUSTED UNLESS A DEFECTIVE PART IS REPLACED.
THE MOTOR SPEED CONTROL OUTPUT IS CONNECTED TO AN OPTICALLY ISOLATED DC MOTOR SPEED CONTROLLER WITH AN ARMATURE OUTPUT OF 0 TO 90 VDC FOR 120VAC INPUT, OR 0 TO 180 VDC FOR 220 VAC INPUT. DC MOTORS FROM FRACTIONAL HP TO 1.5HP MAY BE USED.

HI - LOW LIMIT WELD CYLINDER PRESSURE SENSOR

THE MODEL 108 CONTROLLER HAS THE CAPABILITY TO STORE IN ITS MEMORY, WITH EACH WELD SCHEDULE, A TWO DIGIT NUMBER FOR HI - LOW LIMIT PRESSURE. THAT VALUE HAS A WINDOW OF ACCEPTANCE OF + OR - 1 PSI. THE PRESSURE TRANSDUCER MEASURING THE CYLINDER PRESSURE IS DIFFERENTIAL. PORT B IS USED TO MEASURE THE UPPER SIDE OF THE CYLINDER PRESSURE. PORT A IS USED WHEN THE BOTTOM SIDE OF THE CYLINDER HAS AIR PROVIDING A BUCKING PRESSURE FROM A SECONDARY FORGE AIR PRESSURE REGULATOR. IN THAT CASE, THE PRESSURE VALUE STORED IN THE 108 MEMORY, IS THE DIFFERENTIAL PRESSURE BETWEEN THE TWO SIDES OF THE CYLINDER.

THE VALUE IS KEYED IN VIA THE 108 FRONT PANEL, BY USING THE KEYS (*6) FOR HI - LOW LIMIT PRESSURE. THE LED LABELED *6 WILL FLASH DURING DATA ENTRY OR DATA VIEWING.

AT THE END OF SQUEEZE TIME, THE 108 CONTROLLER WILL CHECK THE SENSOR PRESSURE VALUE FOR TWO CONTINUOUS CYCLES OF TIME. IF THE VALUE READ IS IN THE SPECIFIED RANGE +/- 1PSIG, THE CONTROLLER WILL SEQUENCE TO HEAT TIME. IF THE PRESSURE READ IS OUT OF THE SPECIFIED BOUNDARY, THE LED *6 WILL FLASH, THE DISPLAY WILL SHOW THE READ PRESSURE VALUE AND STAY IN SQUEEZE TIME UNTIL THE CORRECT PRESSURE IS REACHED. KEYING IN THE 108 CONTROLLER THE VALUE "00" WILL CAUSE THE CONTROLLER TO BYPASS THE PRESSURE TEST. THE ANALOG VALUE OF READ PRESSURE BY THE PRESSURE TRANSDUCER MAY BE READ WITH A METER AT THE TEST POINTS TP4 AND TP5 ON THE AUXILIARY BOARD. SEE DETAIL ON DRAWING 155-017A-01 AND SENSOR PLUMING INSTALLATION ON DRAWING 155-017B-01. AN AIR FILTER MAY BE REQUIRED IF THERE IS OIL IN THE LINE.

PC TO MODEL 108 RS232 COMMUNICATION

The Model 108 and 108A weld controllers AUXILIARY BOARD, have an RS232 port available via a DB9 connector. The connector is mounted at the rear of the cabinet.

The purpose of the RS232 port is to facilitate transfer of WELD SCHEDULES from the weld controller to a PC for storage, editing and printing the WELD SCHEDULES on a laser printer. All 300 WELD SCHEDULES are stored under a file name with an extension "WLD". The WELD SCHEDULES may be transferred all at once or one at a time. The transmission is done at 9600 baud, 8 bits, no parity one stop bit, and no flow control.

1. First create a directory in DOS on the "C" drive called 108PC.
2. Copy the 108PC program provided on a floppy disc to that directory.
3. Remove floppy disc and store safely.
4. Your PC will typically have two COMM ports, labeled COMM 1 and COMM 2; Your PC may also have a mouse connected to one of the COMM ports.
5. From your SUB DIRECTORY 108PC in "C" drive type:
   A. 108PC ENTER key if you are using COMM 2 port.
   B. 108PC 1 ENTER key if you are using COMM 1 port.
6. The PC screen will show the following:

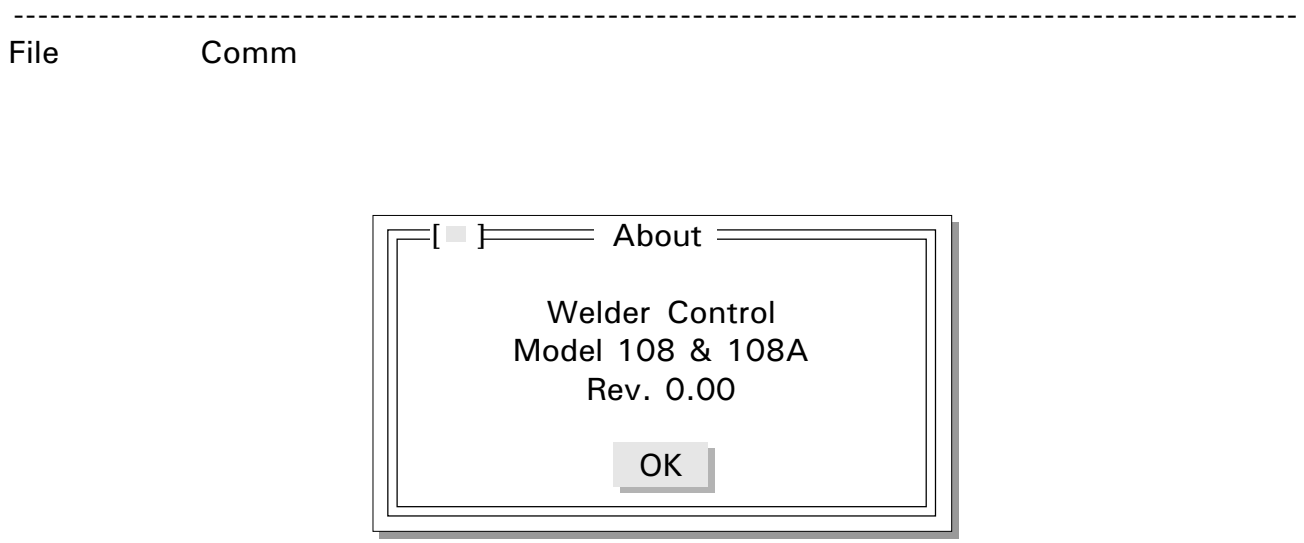

Push the ENTER key on your PC.
The PC screen will go to the file select menu.

FILE SELECTION MENU

File Comm

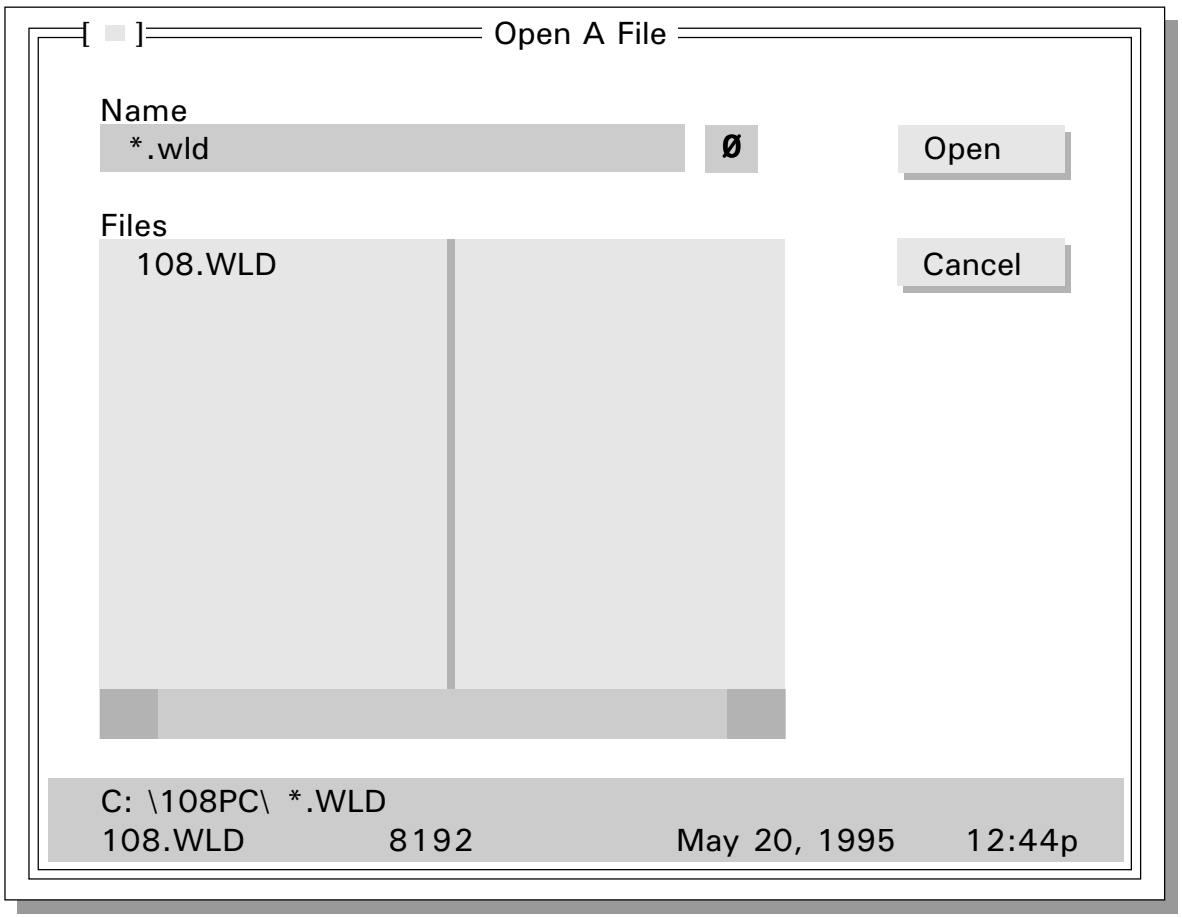

F1 Help Alt-X Exit

The screen is in a WINDOWS type format and a mouse may be used in the NAME designated space to key in up to a 25 letter file name.
The mouse may also be used to click in a preexisting file name from the list of file names displayed in the "Files" column on the screen.
If a mouse driver is not available, the Up/ Down arrow keys will allow selection of a file in the File listing column. After a file has been selected, push the Alt-O key or click on "Open" on the screen to open that file. The "ENTER" key will also open the file after a file selection.

FILE MENU SCREEN

File Comm

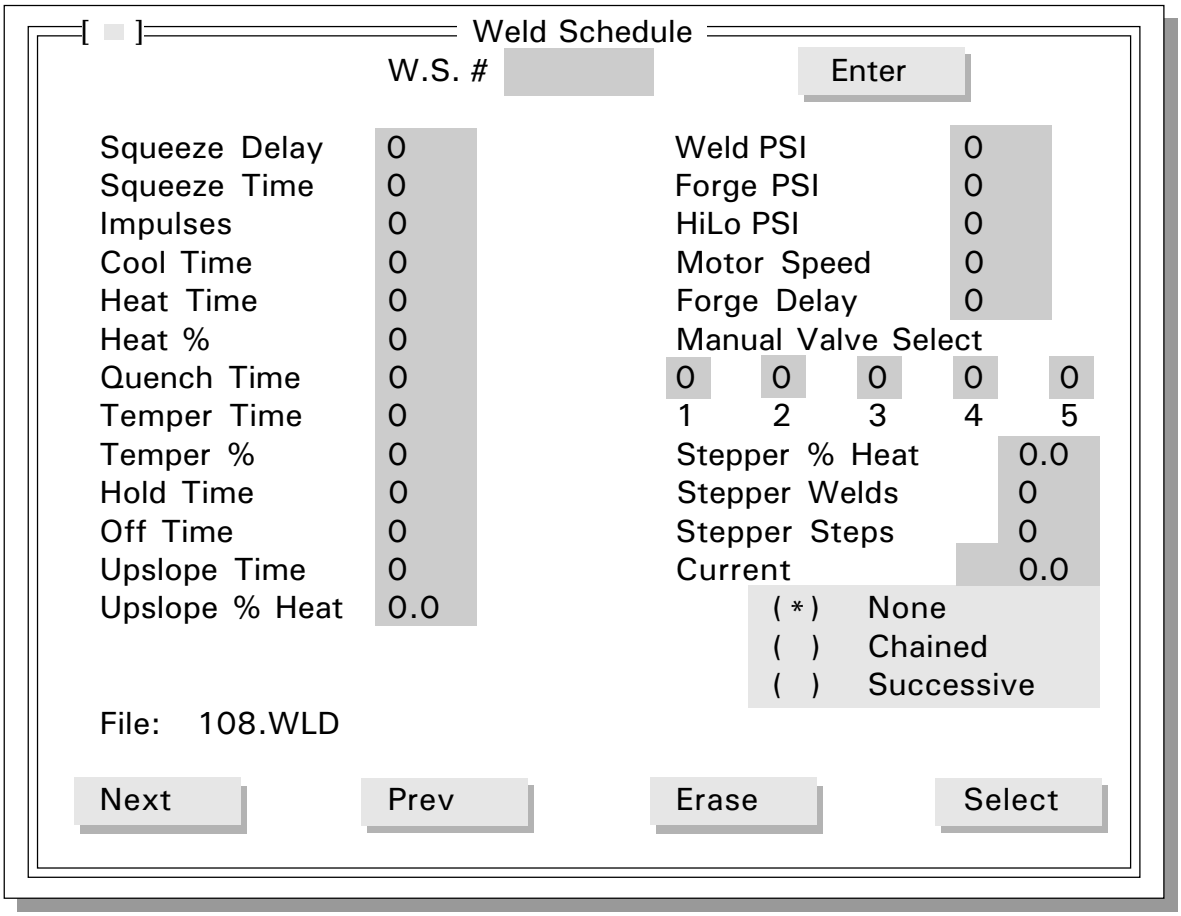

F1 Help Alt-X Exit

All weld functions available in the 108 and 108A controls will be displayed on the screen, starting with weld schedule 00.
Weld Schedules Group A 00 - 99 will be seen as W.S. 00 - 99
Weld Schedules Group B 00 - 99 will be seen as W.S. 100 - 199
Weld Schedules Group C 00 - 99 will be seen as W.S. 200 - 299
To scroll through the weld schedules in the file:

A: Click on Next with mouse or use Alt-N (forward scroll).
B: Click on Prev with the mouse or use Alt-P (backwards scroll).

To EDIT weld schedule data:

A: Click on the appropriate data field to be edited, then change the data using the keys 0 through 9 on the PC.
B: Use the Tab key to scroll foreward through the data fields, then change the data followed by the Enter key.
C: Use the Shift-Tab key to scroll backward through the data fields.
Note: If ENTER field is not clicked on, or the ENTER key is not pushed prior to exit to a new weld schedule, the edited screen data will not be stored in the PC memory and will be lost.
D: The fields (*) None ()Chained ()Successive are mutually exclusive and the * is moved from one to another via the Up / Down arrow keys, once the field is accessed via the Tab key or the mouse.

If data entered in is not within the acceptance limits of the 108 weld controller, when saved it will be set to zero, or the extra digits in the data field are erased. Data entered in the Stepper fields will have no effect if transferred to a Model 108 controller which has no active stepper functions.
Alt-E or clicking the mouse on the Erase field, will set all the data to zero. The erased data will not be saved unless followed by the ENTER key.
Alt-S or clicking the mouse on the Select field, will set create a temporary field in the center of the screen. Key in a value from 0 to 299, then push the ENTER key. The Weld Schedule screen will show the data of the newly selected weld schedule.

STEPPER DATA ENTRY

Stepper % Heat data is a two digit number from 0.0 to 9.9.
Stepper Welds are a three digit number representing the:

1: WELDS PER STEP X 1
2: WELDS PER STEP X 10

A two digit number will be seen in the 108 controller on the Welds per step X 1 column, and a three digit number will be seen in the Welds per step X 10 column.

Stepper Steps is a two digit number, representing the Total Steps in the 108 controller.

COPY WELD DATA FROM ONE WELD SCHEDULE TO ANOTHER

1. Select a weld schedule with weld data to be copied from.
   The field W.S.# -- will show the weld schedule selected.
2. With the screen cursor adjacent to W.S.# -- use the BACK SPACE key to clear the existing weld schedule number. Key in a new weld schedule number. Push the ENTER key. Now the whole weld schedule data field has been saved with the new weld schedule number in the memory location reserved for the newly selected weld schedule.

FILE COMMANDS

From the WELD SCHEDULE menu click on the File field or push Alt-F. A menu will appear in the upper left hand corner.

File Comm

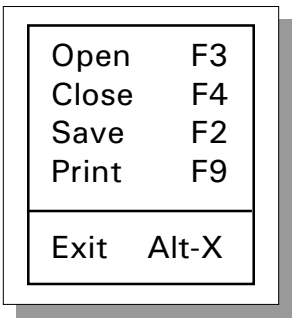

Use the Up / Down arrow keys to scroll through the five fields, or use the designated F keys or the mouse.
The Open command will prompt the file selection menu.
The Close command will close the file .
The Save command will save the file to disk.
The Print command will superimpose on the screen the following menu:

File Comm

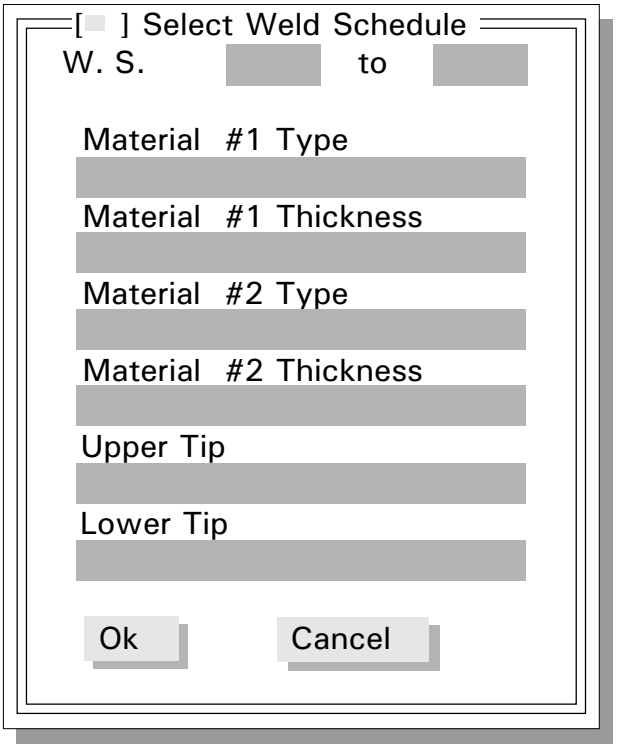

F1 Help Alt-X Exit

Use the Tab key to scroll through the fields where pertinent data is to be entered.
Key in only one weld schedule number to print it with all material and electrode type informations.
Key in the starting and ending weld schedule numbers for the group of weld schedules used in the chained or successive group.

UPLOADING AND DOWNLOADING WELD SCHEDULES

Connect an RS232 cable from the PC to the DB9 connector located in the rear of the 108 controller cabinet. Only those welding controllers ordered with the optional RS232 feature will have that connector. Set the 108 weld controller in the stand by mode. On the PC use the mouse to click on Comm or push Alt-C on the keyboard. In the Upper left corner of the screen the following field shall appear:

File Comm

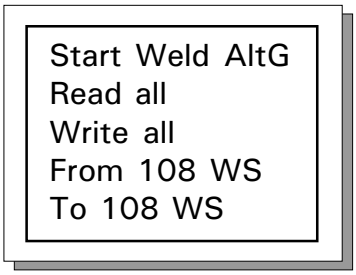

The Up / Down arrow keys will enable scrolling through this field.

"Read all" command will read all 300 weld schedules from the 108 weld controller to the existing file on the PC screen. If data is needed to be saved, click on File and open a file under a new name.
"Write all" command will write all 300 weld schedules from the existing file on the PC screen to the 108 weld controller.

If RS232 communication is not established between the PC and the 108 weld controller, an error message will appear on the screen.

"From 108 WS" command will read that particular weld schedule displayed on the 108 weld controller front panel in group A or B or C. The file name and weld schedule number should be selected prior to data transfer, if that data is to be stored in a specific location.

"To 108 WS" command will write that selected weld schedule to the corresponding location in the 108 weld controller memory.

PLC CONTROL SIMULATION ON THE PC

Set the 108 weld controller in the PLC mode by turning the minidip switches SW7-1 and SW7-2 to the ON position.
If the PC has WINDOWS loaded on the C drive, click on TERMINAL.
It is located in the ACCESSORIES group within the WINDOWS program. Your screen will show the following:

Terminal

File Settings Phone Transfers Help

Click on settings, and from the menu listed, click again on Communications.
Set BAUD RATE to 9600
Set DATA BITS to 8
Set STOP BITS to 1
Set PARITY to None
Set FLOW CONTROL to None
Set CONNECTOR to Com1 or Com2 (the port connected to the 108).
Set the Cap Lock on the PC board to ON.
Click on OK to validate the settings selection.
Turn FS1 on at the 108 controller input.
The character W followed by the number 0 through 99, followed by a period, will choose a weld schedule to be set in the 108 front panel display.
Example: To select weld schedule 51, send "W51."
To select weld schedule 5, send "W5."
To initiate a weld schedule, turn on FS1 on the 108 weld controller, then send the character "G". When the 108 weld controller has finished executing the weld and returned to stand by mode, it will transmit back to the PC the character".". If transmission occurs without prior initiation of FS1 a "," character will be returned to the PC screen.

108A STEPPER FUNCTIONS

The STEPPER CONTROL is a means of gradual increase of weld current every so many welds made. This is done by an increase of the initial HEAT % setting from 0.0% to 9.9% per step.
A STEP is considered to a group of welds made. Since the data entered in the 108 controller is limited to two digits only, two entries are made available:

1. WELDS PER STEP X 1
2. WELDS PER STEP X 10

The last data entry is the total number of STEPS allowed before welding is inhibited, and the electrode tips must be replaced.
If the welder is in the REPEAT mode, the welder will not halt until the foot switch is released. The number 88 will flash in the 108 brain panel window and all continued welds will be inhibited. Momentary reset by using the HARD E.Stop switch connected to TB1-6 and TB1-7 will release the controller for continued operation.

To set % HEAT PER STEP push **1 on the keyboard. Key in number then push * to return to stand by mode.

To set WELDS PER STEP X 1 push **2 on the keyboard. Key in number then push * to return to stand by mode.

To set WELDS PER STEP X 10 push **3 on the keyboard. Key in number then push * to return to stand by mode.

To set TOTAL STEPS push **4 on the keyboard. Key in the number then push * to return to stand by mode.

WELD SCHEDULE MEMORY RESET

There are two ways to set all weld schedule data to zero.

1. If the RS232 option is installed, then from a PC labtop open up an unused file, and do an all weld schedule transfer to the 108 controller.
2. Power Down the 108 controller, set the brain panel switches S5-1; S5-3; S5-4; SW7-1 and SW7-2 on, then power up the 108 controller.

The front panel will display 88 in the window, then change to 00 when all memory has been reset to zero. Turn power off, set S5 and SW7 to the normally selected operating position, then power up the 108 controller. The controller is now ready to be programmed and used.

WELD SCHEDULE EDIT LOCKOUT KEY

An optional weld edit lockout key is provided with the RS232 option. It allows selection of a weld schedule to be used, but it disables the operator ability to scroll through the weld schedule and edit its contents.

Fairchild Electronic Pressure Regulator and Volume Booster Calibration Procedure

THE ELECTRONIC PRESSURE REGULATOR HAS A ZERO AND SPAN ADJUSTMENT FOR CALIBRATION. THESE ARE FACTORY PRESET AND NEED NOT BE READJUSTED UNLESS A DEFECTIVE PART IS REPLACED.

1. System Description
   The model 108 weld controller puts out a 0 volt to 10 volt DC signal to the Fairchild Pilot Pressure Regulator, which will put out a pilot pressure of 10 CFM from 0 PSIG to 100 PSIG. The regulator output connects to a 1 to 1 air volume booster, which boosts the air flow capacity to 40 CMF or 150 CFM depending on the model used. The volume booster output is connected to a pressure gage and to an air valve which controls the airflow direction.

2. WELD and FORGE Pressure Calibration
   Connect a 4" diameter calibrated pressure gage with a range of 100 PSIG full scale to the volume booster output.

   STEP 1: On the 108 controller push *4 and set weld pressure to **20** PSI.
   The gage should read 20 PSI. If not, use a flat screw driver to adjust the screw marked "**ZERO**" located on the back side of the Pilot WELD Pressure Regulator until the pressure gage reads 20 PSI.

   STEP 2: On the 108 controller push *4 and set weld pressure to **80** PSI.
   The gage should read 80 PSI. If not, use a flat screw driver to adjust the screw marked "**SPAN**" located on the back side of the Pilot Pressure Regulator until the pressure gage reads 80 PSI.

   Go back and re-calibrate ZERO at 20 PSI and SPAN at 80 PSI. Follow Step 1 and Step 2 until your gage reads the proper settings.

   Use the same calibration procedures for the FORGE Pressure Regulator entering *5.

SCHEMATICS

MODEL 108 BRAIN PANEL
150-020-02A 1, 2
MODEL 108 PERIPHERAL BOARD
155-017-01A 3
MODEL 108 STANDARD WELDER AND BUTT-WELDER
155-018-01A 4
CASCADE 3 GUNS OR 3 CONTACTORS
155-019-01A 5
CASCADE 6 GUNS OR 6 CONTACTORS
155-019-01B 6
STANDARD WELDER WITH FORGE
155-020-01A 7
MODEL 108 (1 CONTACTOR 1 GUN VALVE)
155-017-03A 8
DETECT A FINGER SAFETY SYSTEM
155-018-02A 9
PRESSURE REGULATOR AND PRESSURE SENSOR
155-017B-01 10
PRESSURE REGULATOR AND PRESSURE SENSOR
155-017C-01 11
AUXILARY BOARD
155-017A-01 12
CASCADE 3 TRANSFORMERS WITH CLAMP AND PART LOCATOR
155-019-01C 13
DUAL BUTTWELDERS WITH ONE TRANSFORMER
155-019-01D 14
MODEL 224 3 OPERATOR FOOT SWITCH INTERLOCK
155-019-01E 15
1 PHASE PHASE TO 3 PHASE CONVERTER
155-019-01E 16
108MSC MOTOR SPEED CONTROL
146-010-02 17
402A IGNITRON FIRING MODULE
150-022-01 18
IGNITRON AND SCR CONTACTOR INTERCONNECT
150-010-01 19

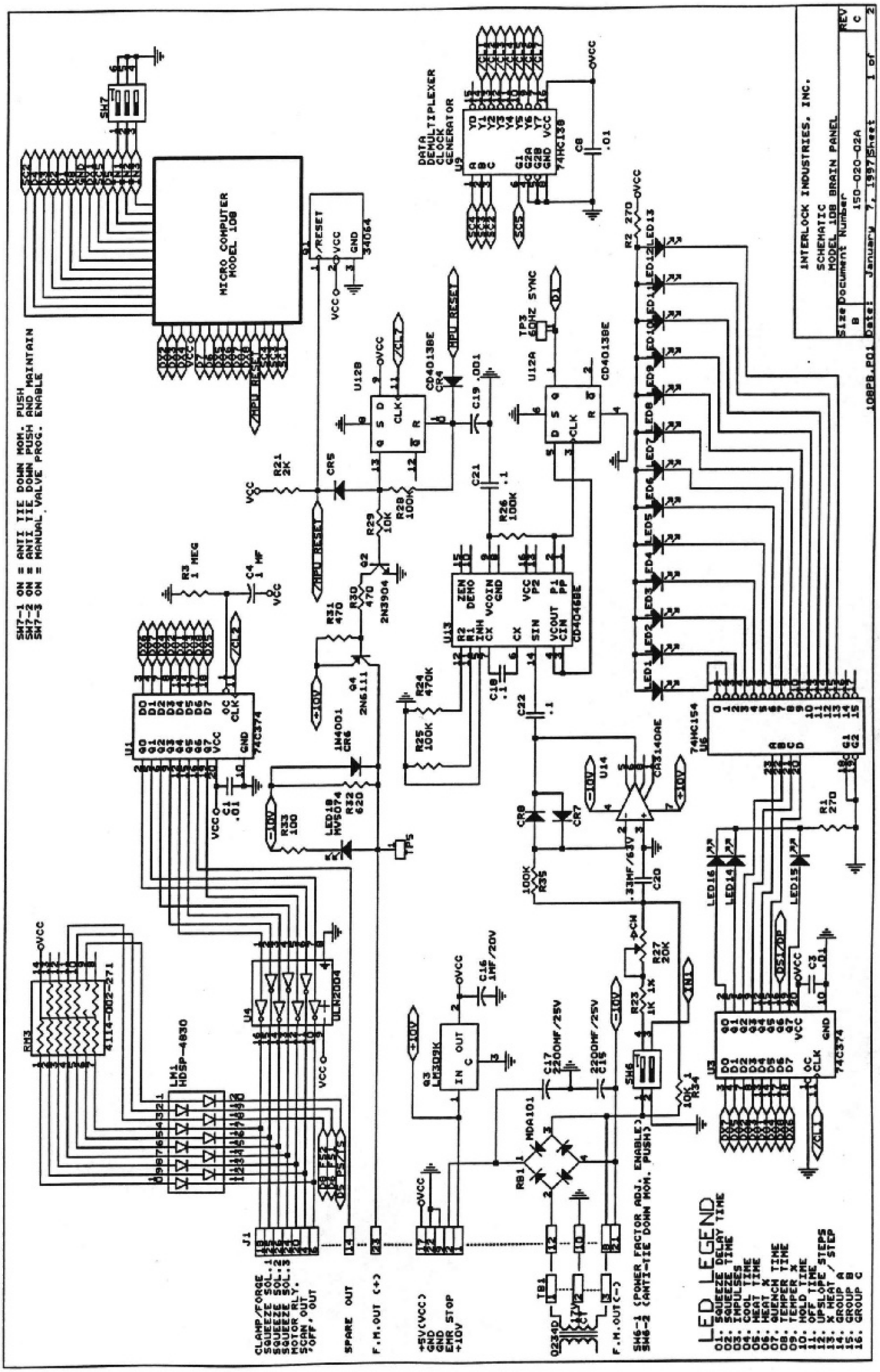
INTERLOCK INDUSTRIES, INC.
SCHEMATIC
MODEL 108 BRAIN PANEL
Size B
Document Number 150-020-02A
REV C
Date: January 7, 1997
Sheet 1 of 2
108PB.P01
MICRO COMPUTER MODEL 108
DATA DEMULTIPLEXER CLOCK GENERATOR
SW7-1 ON = ANTI TIE DOWN MOM. PUSH
SW7-2 ON = ANTI TIE DOWN PUSH AND MAINTAIN
SW7-3 ON = MANUAL VALVE PROG. ENABLE
LED LEGEND
01. SQUEEZE DELAY TIME
02. SQUEEZE TIME
03. IMPULSES
04. COOL TIME
05. HEAT TIME
06. HEAT %
07. QUENCH TIME
08. TEMPER TIME
09. TEMPER %
10. HOLD TIME
11. OFF TIME
12. UPSLOPE STEPS
13. % HEAT / STEP
14. GROUP A
15. GROUP B
16. GROUP C
CLAMP/FORGE
SQUEEZE SOL.1
SQUEEZE SOL.2
SQUEEZE SOL.3
MOTOR RLY.
SCAN OUT
'OFF' OUT
SPARE OUT
F.M.OUT (+)
+5V(VCC)
GND
GND
EMR STOP
+10V
F.M.OUT(-)
SW6-1 (POWER FACTOR ADJ. ENABLE)
SW6-2 (ANTI-TIE DOWN MOM. PUSH)

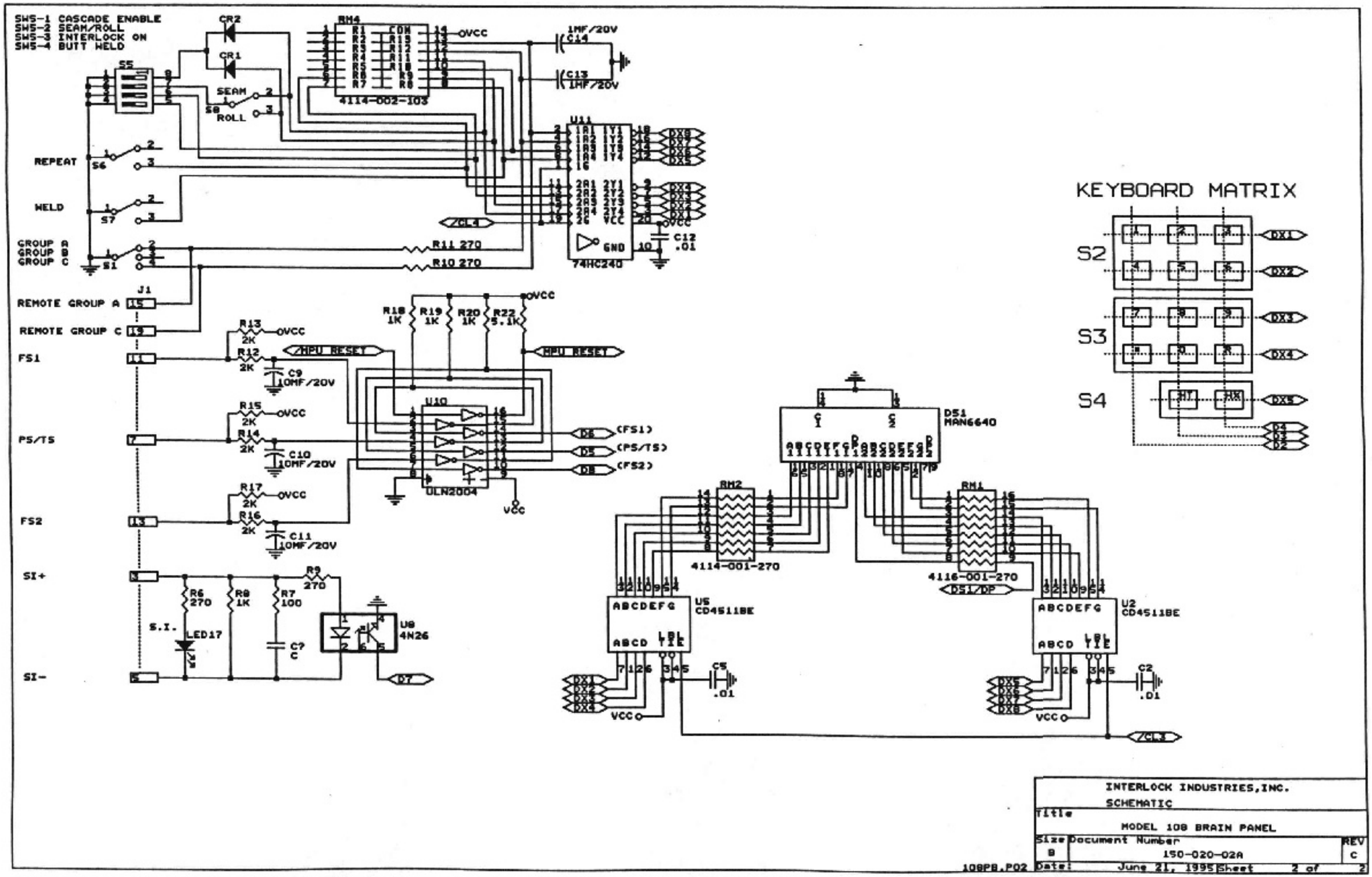
SW5-1 CASCADE ENABLE
SW5-2 SEAM/ROLL
SW5-3 INTERLOCK ON
SW5-4 BUTT WELD
S5
CR2
CR1
SEAM
S8
ROLL
RM4
4114-002-103
VCC
1MF/20V
C14
C13
1MF/20V
U11
74HC240
GND
C12
.01
REPEAT
S6
WELD
S7
GROUP A
GROUP B
GROUP C
S1
R11 270
R10 270
/CL4
J1
REMOTE GROUP A
REMOTE GROUP C
FS1
PS/TS
FS2
SI+
SI-
R13
2K
R12
2K
C9
10MF/20V
R15
2K
R14
2K
C10
10MF/20V
R17
2K
R16
2K
C11
10MF/20V
R18
1K
R19
1K
R20
1K
R22
5.1K
/MPU RESET
MPU RESET
U10
ULN2004
(FS1)
(PS/TS)
(FS2)
R6
270
R8
1K
R7
100
R9
270
S.I.
LED17
C7
C
U8
4N26
D7
KEYBOARD MATRIX
S2
S3
S4
DX1
DX2
DX3
DX4
DX5
D4
D3
D2
DS1
MAN6640
RM2
4114-001-270
RM1
4116-001-270
DS1/DP
U5
CD4511BE
U2
CD4511BE
C5
.01
C2
.01
/CL3
INTERLOCK INDUSTRIES,INC.
SCHEMATIC
Title
MODEL 108 BRAIN PANEL
Size
B
Document Number
150-020-02A
REV
C
Date:
June 21, 1995
Sheet
2 of
2
108PB.P02

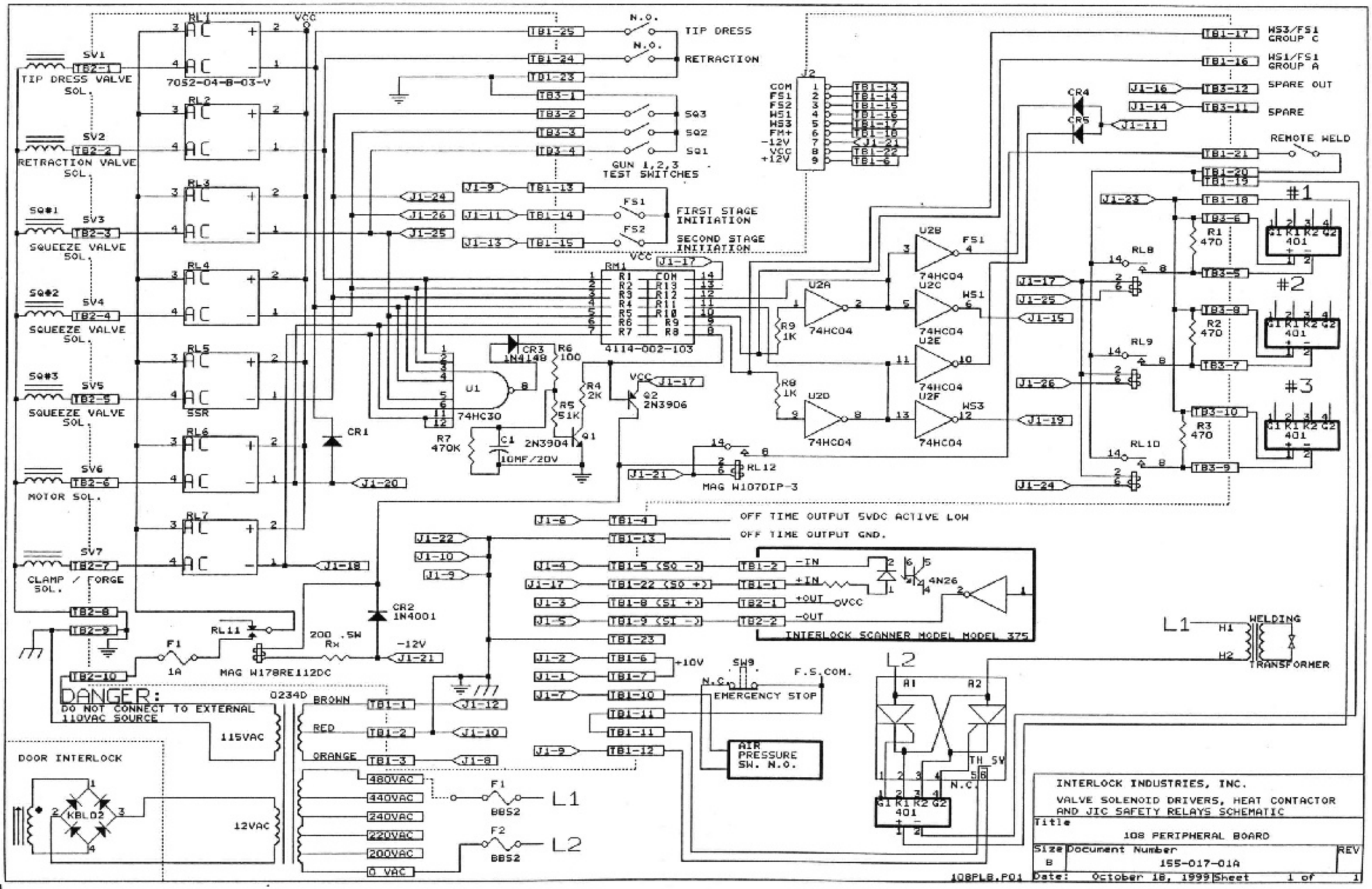
SV1
TIP DRESS VALVE SOL.
SV2
RETRACTION VALVE SOL.
SQ#1
SV3
SQUEEZE VALVE SOL.
SQ#2
SV4
SQUEEZE VALVE SOL.
SQ#3
SV5
SQUEEZE VALVE SOL.
SV6
MOTOR SOL.
SV7
CLAMP / FORGE SOL.
RL1
RL2
RL3
RL4
RL5
RL6
RL7
7052-04-B-03-V
SSR
VCC
TIP DRESS
RETRACTION
SQ3
SQ2
SQ1
GUN 1,2,3 TEST SWITCHES
FIRST STAGE INITIATION
SECOND STAGE INITIATION
FS1
FS2
J2
COM
FS1
FS2
WS1
WS3
FM+
-12V
VCC
+12V
RM1
4114-002-103
CR3 1N4148
R6 100
R4 2K
R5 51K
R7 470K
C1 10MF/20V
U1
74HC30
Q1 2N3904
Q2 2N3906
CR1
CR2 1N4001
RL11
200 .5W Rx
F1 1A
MAG W178RE112DC
-12V
U2A
U2B
U2C
U2D
U2E
U2F
74HC04
R9 1K
R8 1K
RL12
MAG W107DIP-3
WS3/FS1 GROUP C
WS1/FS1 GROUP A
SPARE OUT
SPARE
REMOTE WELD
CR4
CR5
#1
#2
#3
401
R1 470
R2 470
R3 470
RL8
RL9
RL10
OFF TIME OUTPUT 5VDC ACTIVE LOW
OFF TIME OUTPUT GND.
-IN
+IN
+OUT
-OUT
4N26
INTERLOCK SCANNER MODEL MODEL 375
+10V
SW9
N.C.
F.S.COM.
EMERGENCY STOP
AIR PRESSURE SW. N.O.
L1
L2
HI
H2
WELDING TRANSFORMER
A1
A2
TH SW
N.C.
DANGER:
DO NOT CONNECT TO EXTERNAL 110VAC SOURCE
0234D
BROWN
RED
ORANGE
115VAC
12VAC
480VAC
440VAC
240VAC
220VAC
200VAC
0 VAC
DOOR INTERLOCK
KBL02
BBS2
INTERLOCK INDUSTRIES, INC.
VALVE SOLENOID DRIVERS, HEAT CONTACTOR AND JIC SAFETY RELAYS SCHEMATIC
Title
108 PERIPHERAL BOARD
Size B
Document Number 155-017-01A
REV
Date: October 18, 1999
Sheet 1 of 1
108PLB.P01

SINGLE HEAD WELDING MACHINE

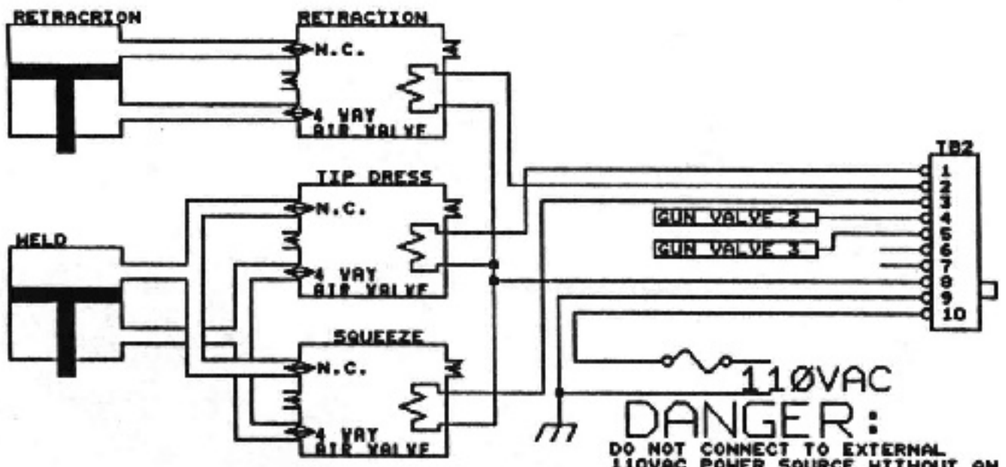

BUTT WELD MACHINE

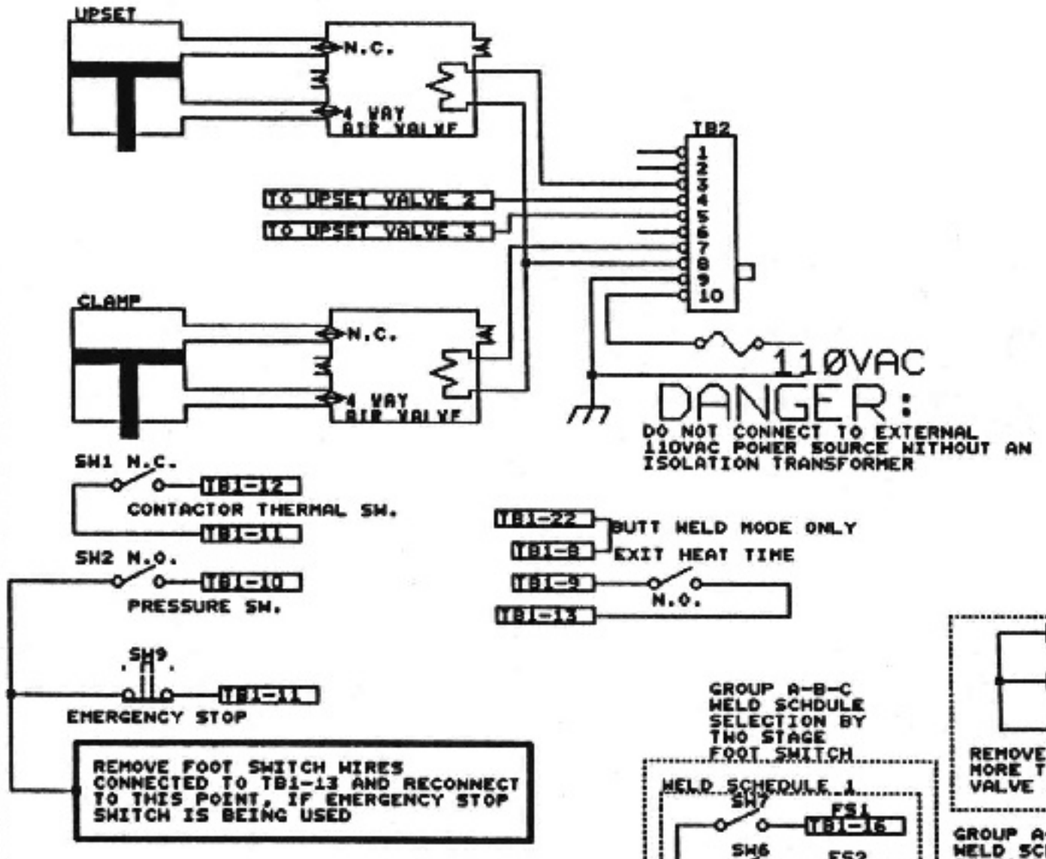

108PLB.P02

INTERLOCK INDUSTRIES, INC	
USER WIRING DIAGRAM	
Title: MODEL 108 STANDARD WELDER AND BUTT WELDER	
Size: B	Document Number: 155-018-01A REV
Date: April 17, 1995	Sheet 1 of 1

CASCADE 3 GUNS WITH ONE CONTACTOR

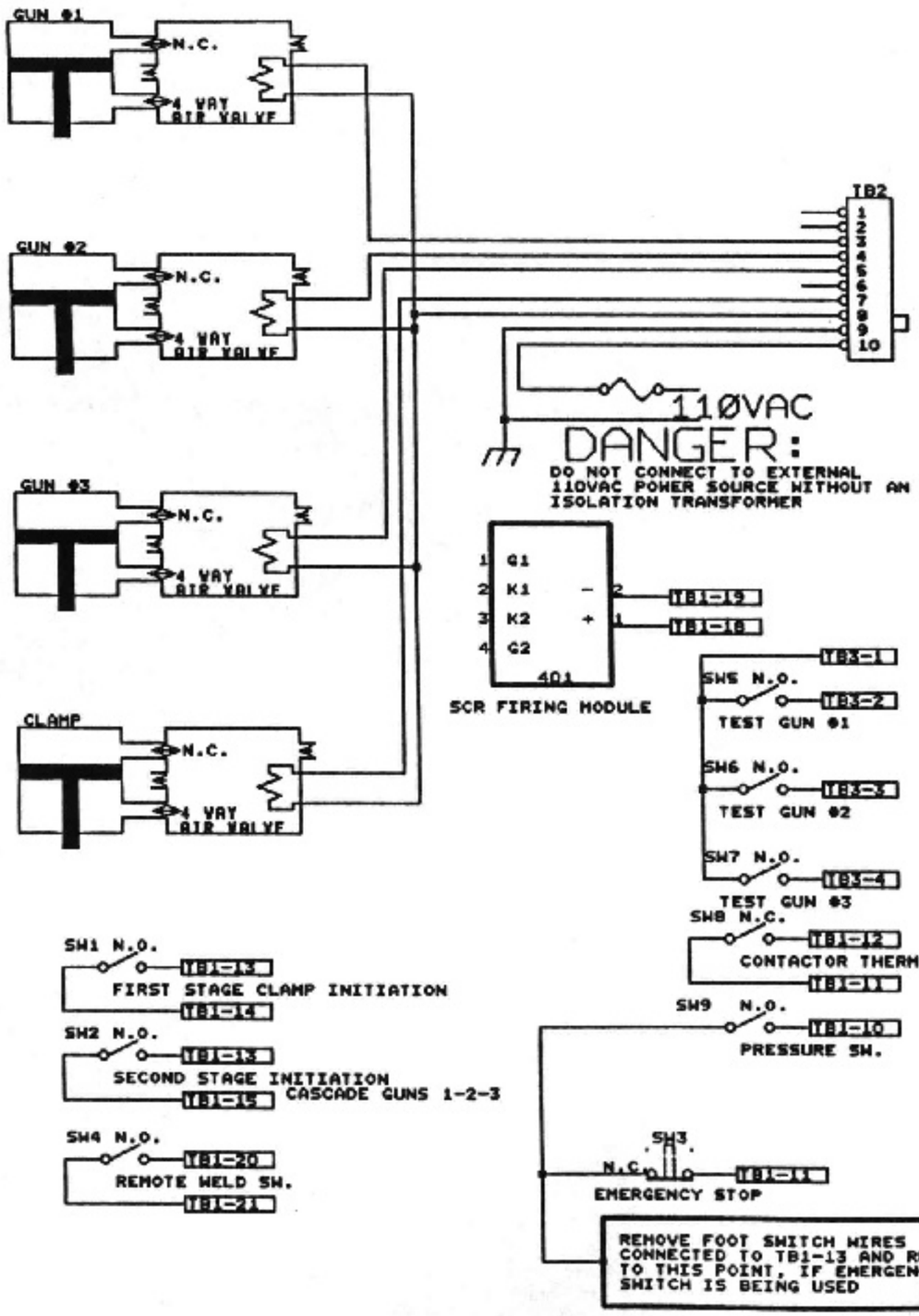

CASCADE 3 CONTACTORS WITH ALL GUNS ENGAGED

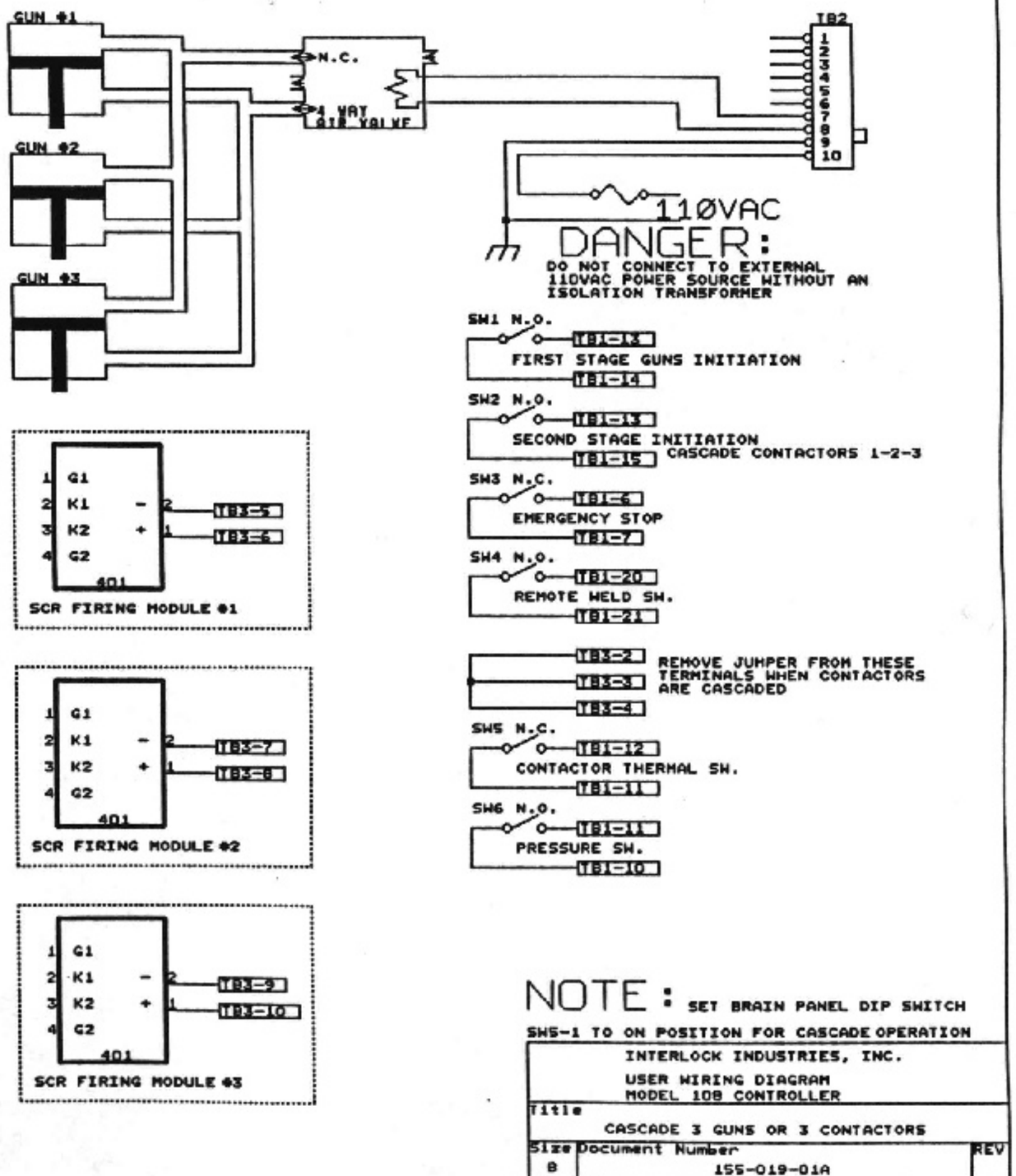

NOTE: SET BRAIN PANEL DIP SWITCH SW5-1 TO ON POSITION FOR CASCADE OPERATION

INTERLOCK INDUSTRIES, INC.		
USER WIRING DIAGRAM MODEL 108 CONTROLLER		
Title: CASCADE 3 GUNS OR 3 CONTACTORS		
Size: B	Document Number: 155-019-01A	REV
108PLB.PD3	Date: April 12, 1995 Sheet 1 of 1	

CASCADE 6 GUNS WITH ONE CONTACTOR

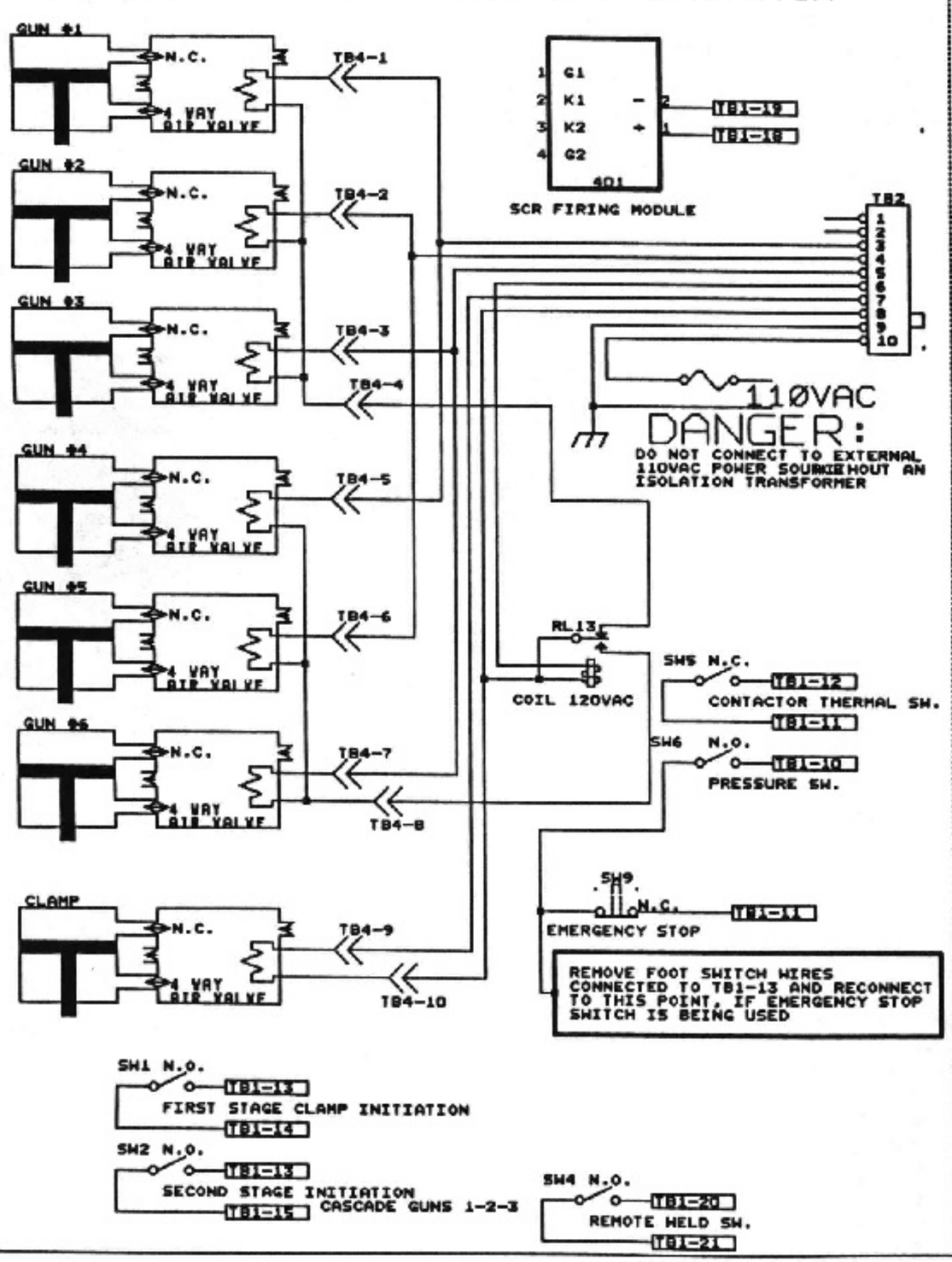

CASCADE 6 CONTACTORS WITH ALL GUNS ENGAGED

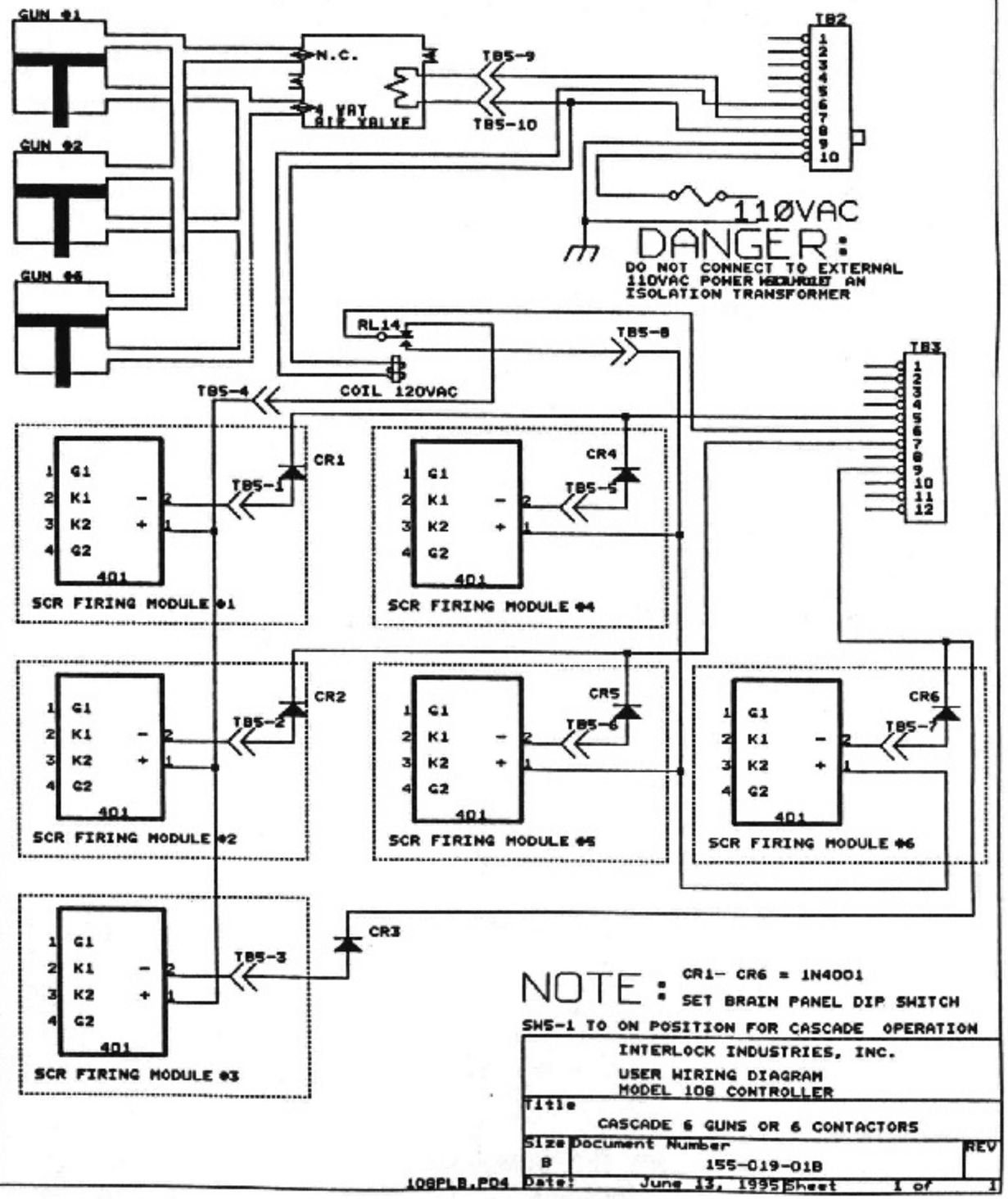

SINGLE HEAD WELDING MACHINE

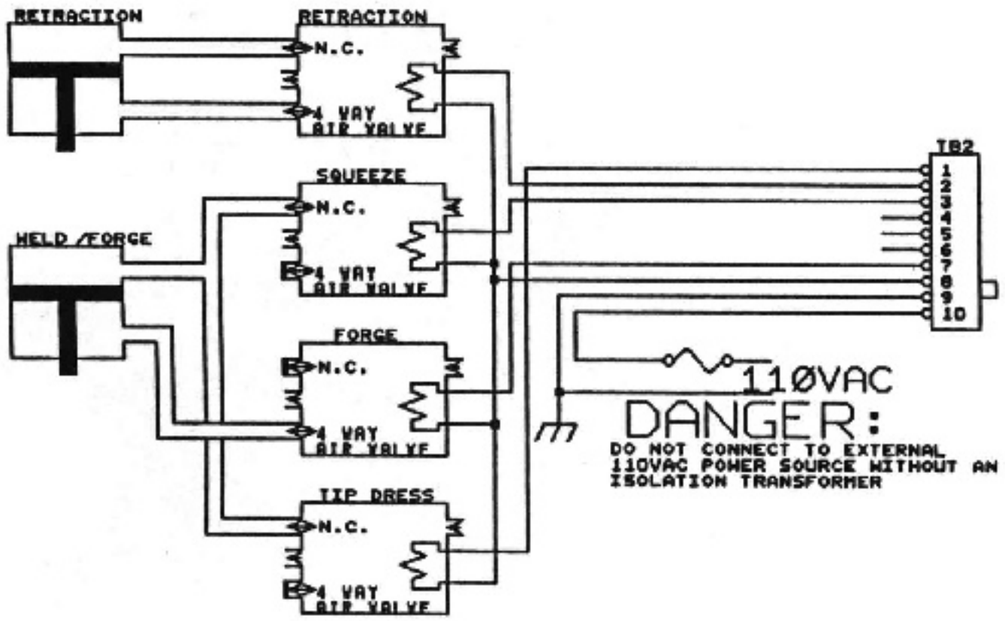

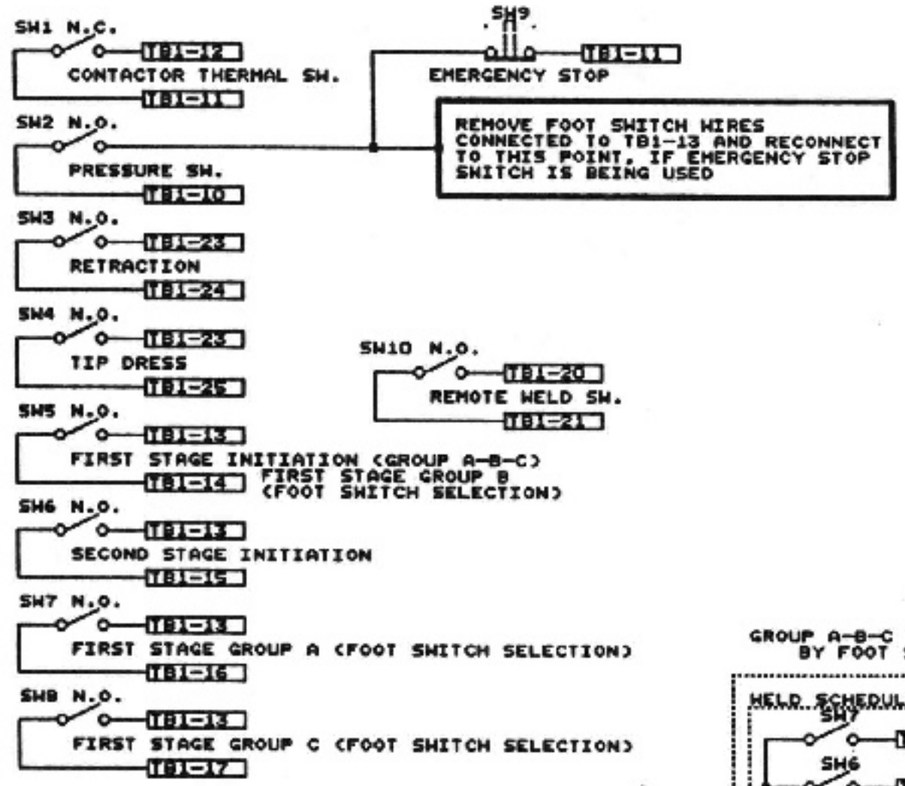

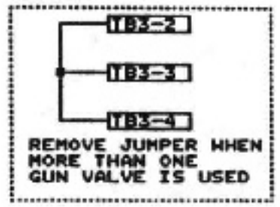

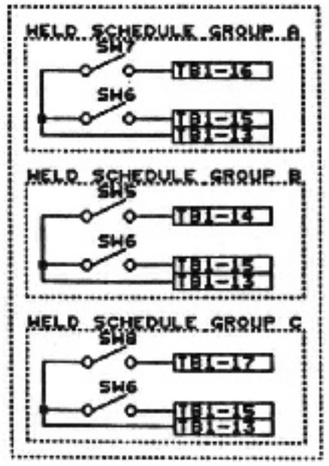

INETRLOCK INDUSTRIES, INC.		
USER WIRING DIAGRAM MODEL 108 CONTROLLER		
Title: STANDARD WELDER WITH FORGE		
Size: B	Document Number: 155-020-01A	REV:
108PLB.PDS	Date: March 31, 1995	Sheet 1 of 1

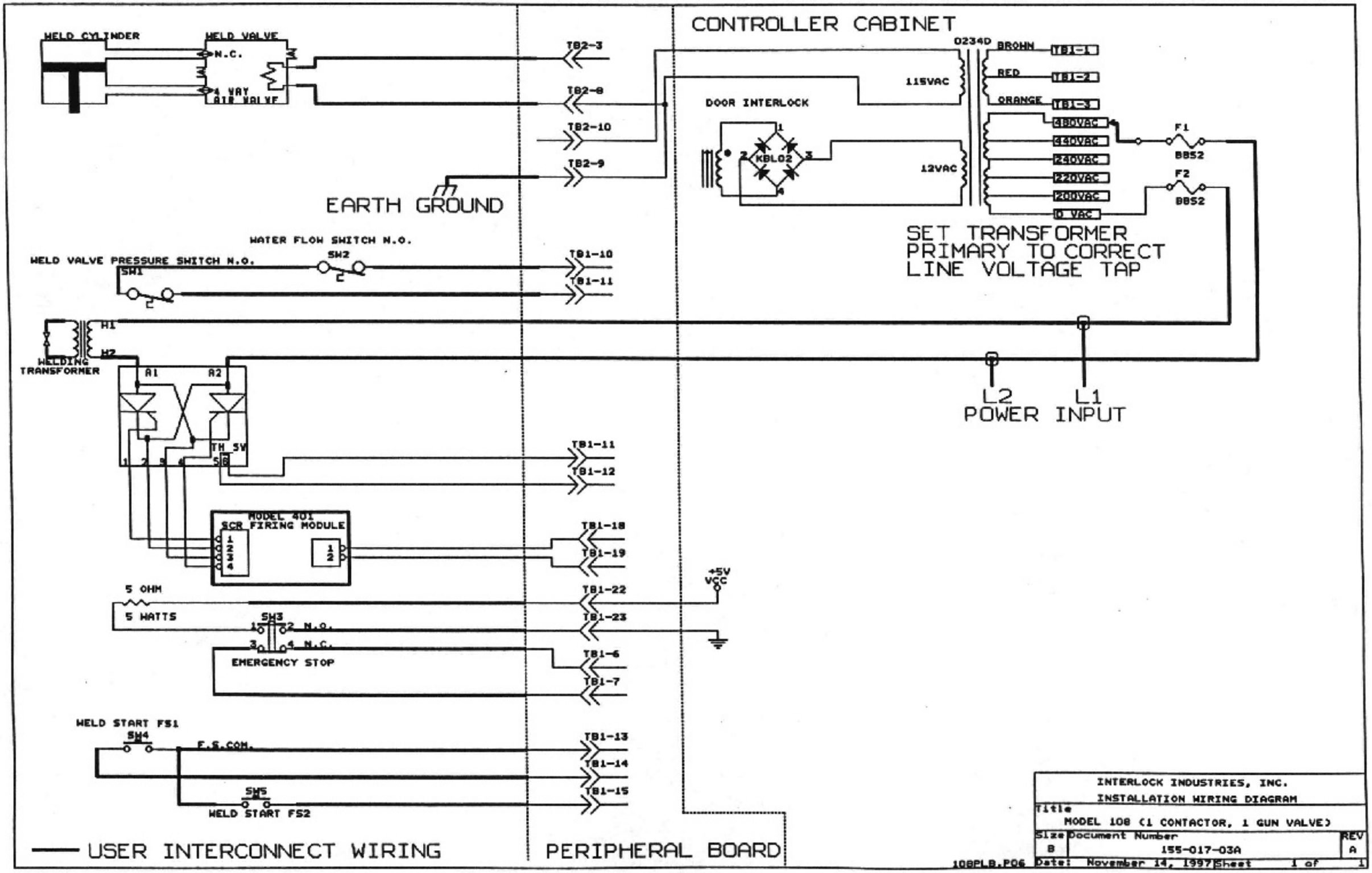
CONTROLLER CABINET
HELD CYLINDER
HELD VALVE
N.C.
4 WAY AIR VALVE
TB2-3
TB2-8
TB2-10
TB2-9
EARTH GROUND
DOOR INTERLOCK
KBL02
115VAC
12VAC
0234D
BROWN
RED
ORANGE
480VAC
440VAC
240VAC
220VAC
200VAC
0 VAC
TB1-1
TB1-2
TB1-3
F1
F2
8852
8852
SET TRANSFORMER PRIMARY TO CORRECT LINE VOLTAGE TAP
WATER FLOW SWITCH N.O.
WELD VALVE PRESSURE SWITCH N.O.
SW1
SW2
TB1-10
TB1-11
H1
H2
WELDING TRANSFORMER
A1
A2
L2
POWER
L1
INPUT
TH SW
5 6
TB1-11
TB1-12
MODEL 401
SCR FIRING MODULE
TB1-18
TB1-19
+5V
VCC
5 OHM
5 WATTS
SW3
N.O.
N.C.
TB1-22
TB1-23
TB1-6
TB1-7
EMERGENCY STOP
WELD START FS1
SW4
F.S.COM.
TB1-13
TB1-14
SW5
TB1-15
WELD START FS2
USER INTERCONNECT WIRING
PERIPHERAL BOARD
INTERLOCK INDUSTRIES, INC.
INSTALLATION WIRING DIAGRAM
Title
MODEL 108 (1 CONTACTOR, 1 GUN VALVE)
Size B
Document Number 155-017-03A
REV A
108PLB.PO6
Date: November 14, 1997 Sheet 1 of 1

108 PERIPHERAL BOARD

ROCKFORD
DETECT A FINGER
SAFETY DEVICE SYSTEM
MODEL RKC-500Ø

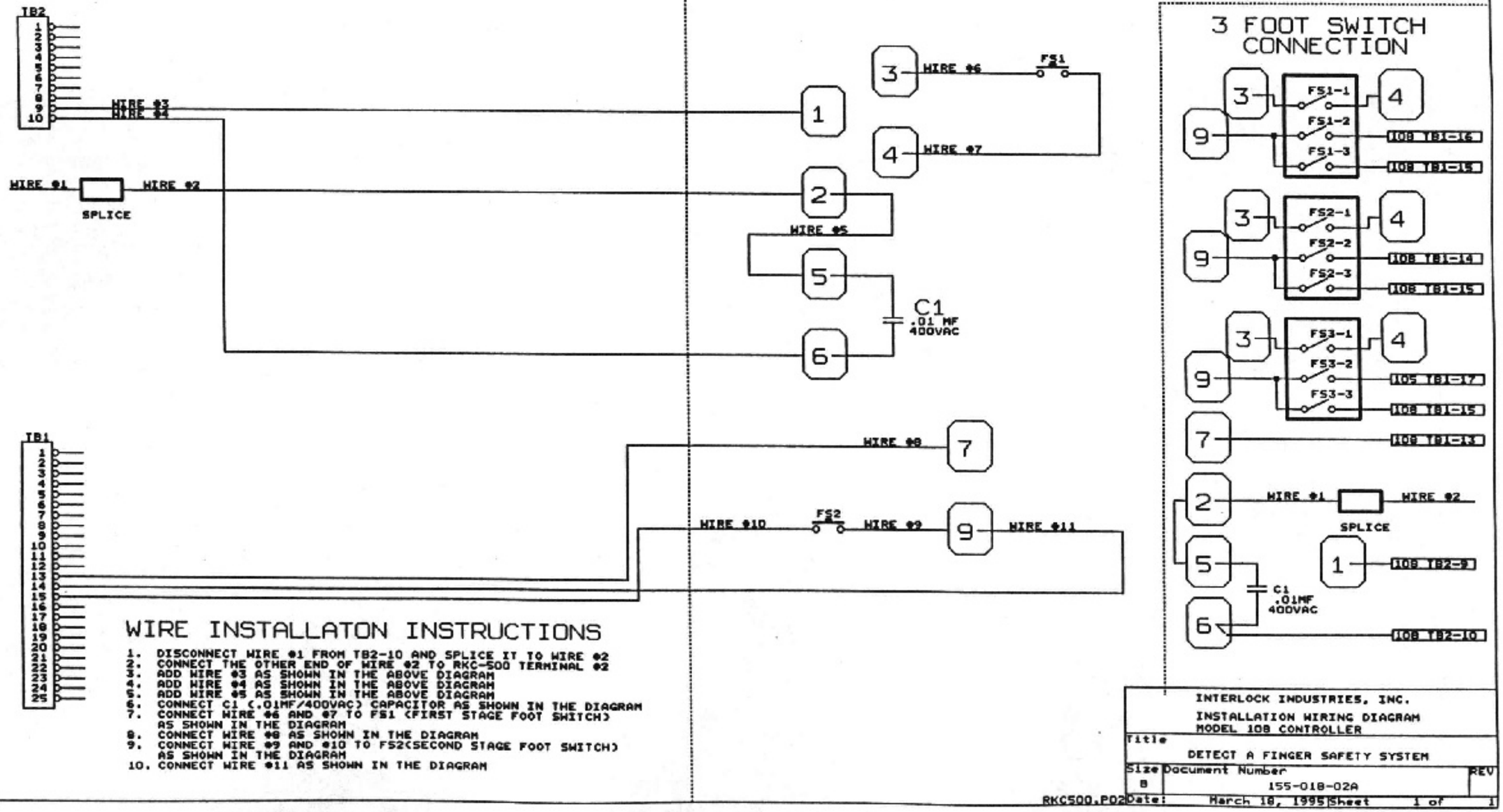

WIRE INSTALLATON INSTRUCTIONS

1. DISCONNECT WIRE #1 FROM TB2-10 AND SPLICE IT TO WIRE #2
2. CONNECT THE OTHER END OF WIRE #2 TO RKC-500 TERMINAL #2
3. ADD WIRE #3 AS SHOWN IN THE ABOVE DIAGRAM
4. ADD WIRE #4 AS SHOWN IN THE ABOVE DIAGRAM
5. ADD WIRE #5 AS SHOWN IN THE ABOVE DIAGRAM
6. CONNECT C1 (.01MF/400VAC) CAPACITOR AS SHOWN IN THE DIAGRAM
7. CONNECT WIRE #6 AND #7 TO FS1 (FIRST STAGE FOOT SWITCH) AS SHOWN IN THE DIAGRAM
8. CONNECT WIRE #8 AS SHOWN IN THE DIAGRAM
9. CONNECT WIRE #9 AND #10 TO FS2(SECOND STAGE FOOT SWITCH) AS SHOWN IN THE DIAGRAM
10. CONNECT WIRE #11 AS SHOWN IN THE DIAGRAM

INTERLOCK INDUSTRIES, INC.

INSTALLATION WIRING DIAGRAM
MODEL 108 CONTROLLER

Title		
DETECT A FINGER SAFETY SYSTEM		
Size: B	Document Number: 155-018-02A	REV
RKC500.P02	Date: March 18, 1995	Sheet 1 of 1

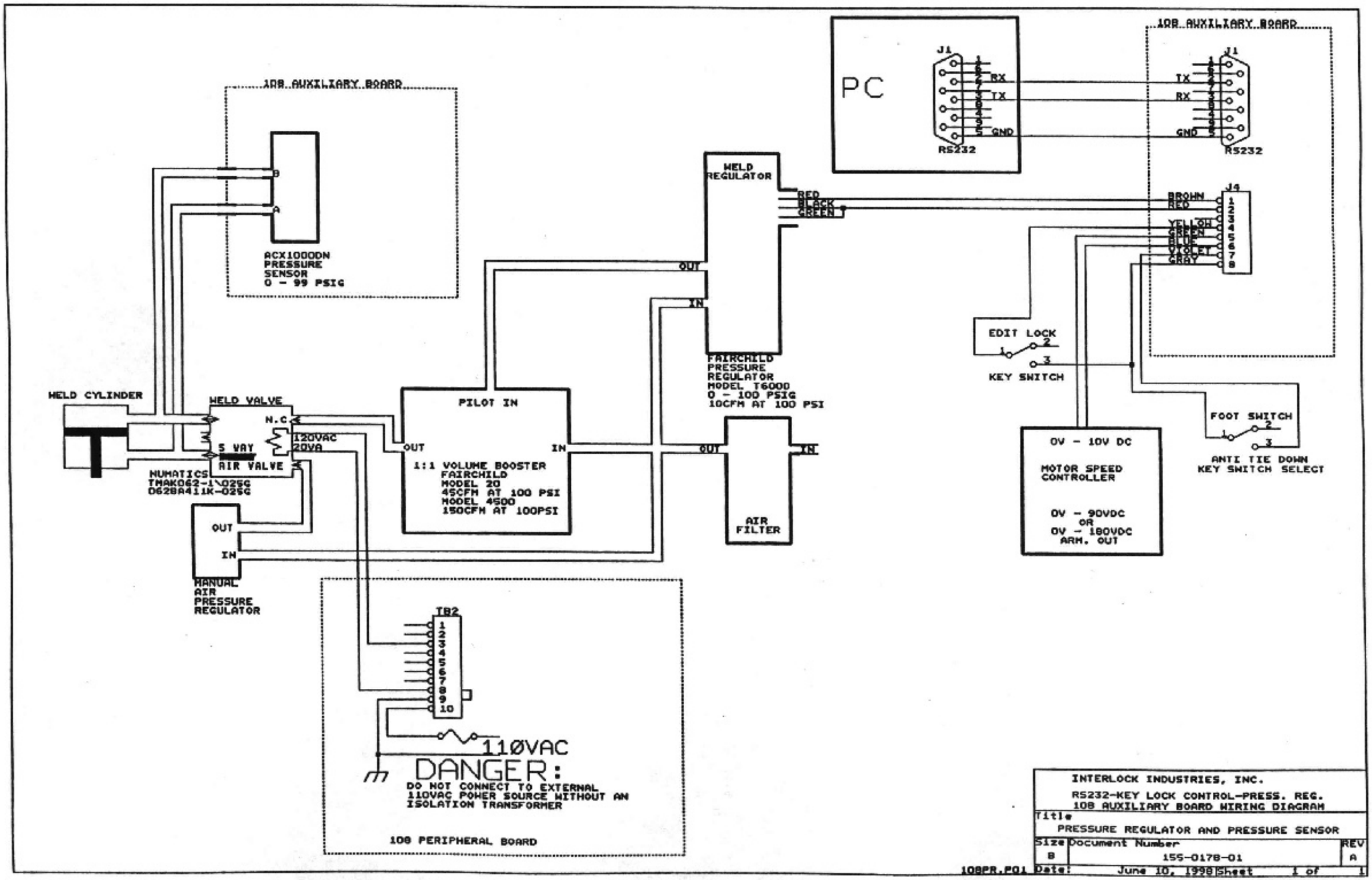

INTERLOCK INDUSTRIES, INC.		
RS232-KEY LOCK CONTROL-PRESS. REG. 108 AUXILIARY BOARD WIRING DIAGRAM		
Title: PRESSURE REGULATOR AND PRESSURE SENSOR		
Size: B	Document Number: 155-0178-01	REV: A
108PR.PO1	Date: June 10, 1998	Sheet 1 of 1

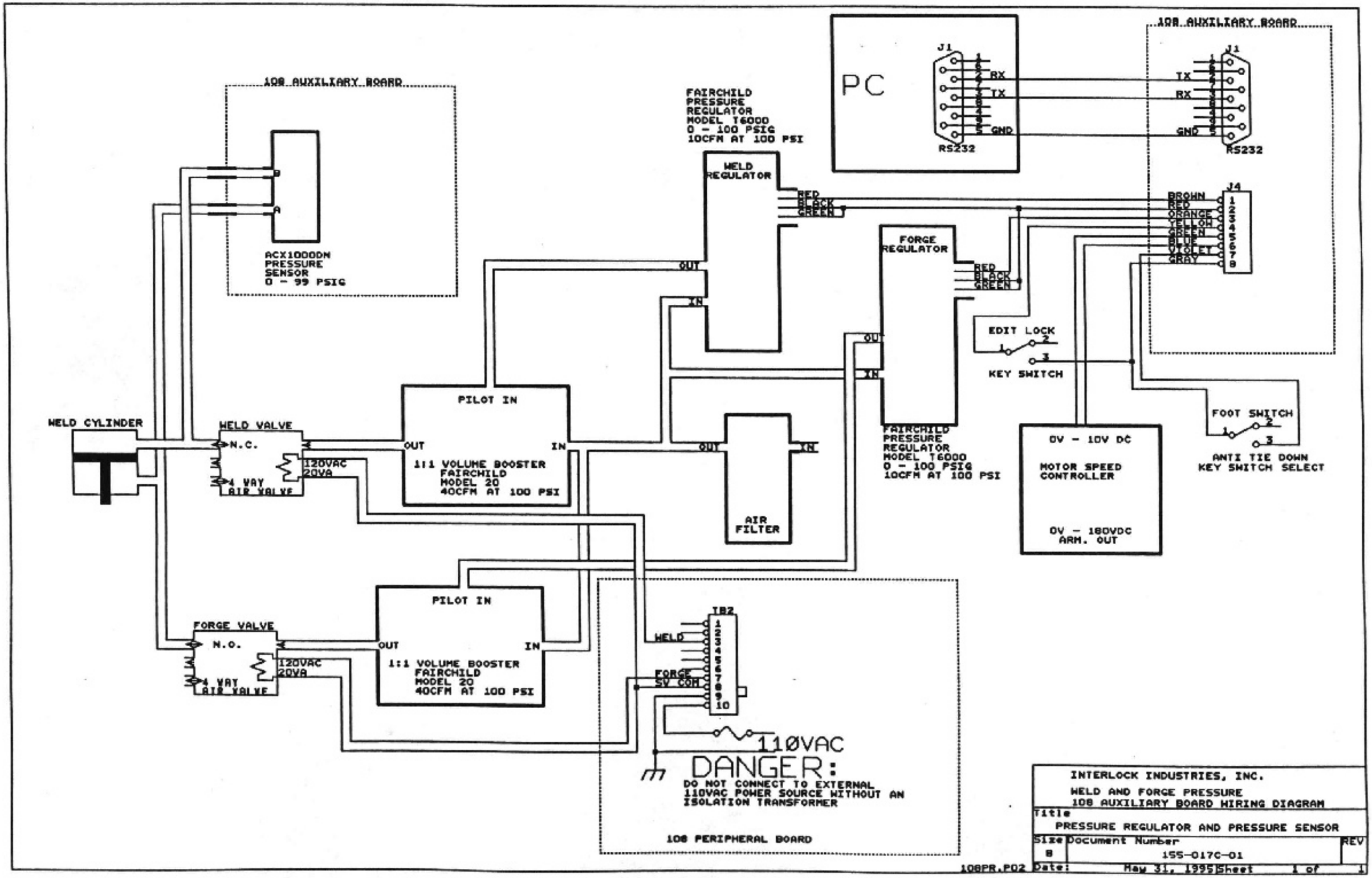
108 AUXILIARY BOARD
ACX1000DN
PRESSURE
SENSOR
0 - 99 PSIG
B
A
PC
J1
RX
TX
GND
RS232
108 AUXILIARY BOARD
J1
TX
RX
GND
RS232
J4
BROWN
RED
ORANGE
YELLOW
GREEN
BLUE
VIOLET
GRAY
1 2 3 4 5 6 7 8
FAIRCHILD
PRESSURE
REGULATOR
MODEL T6000
0 - 100 PSIG
10CFM AT 100 PSI
WELD
REGULATOR
RED
BLACK
GREEN
OUT
IN
FORGE
REGULATOR
RED
BLACK
GREEN
OUT
IN
EDIT LOCK
1
2
3
KEY SWITCH
FOOT SWITCH
1
2
3
ANTI TIE DOWN
KEY SWITCH SELECT
PILOT IN
OUT
IN
1:1 VOLUME BOOSTER
FAIRCHILD
MODEL 20
40CFM AT 100 PSI
OUT
IN
AIR
FILTER
FAIRCHILD
PRESSURE
REGULATOR
MODEL T6000
0 - 100 PSIG
10CFM AT 100 PSI
0V - 10V DC
MOTOR SPEED
CONTROLLER
0V - 180VDC
ARM. OUT
WELD CYLINDER
WELD VALVE
N.C.
4 WAY
AIR VALVE
120VAC
20VA
PILOT IN
OUT
IN
1:1 VOLUME BOOSTER
FAIRCHILD
MODEL 20
40CFM AT 100 PSI
FORGE VALVE
N.O.
4 WAY
AIR VALVE
120VAC
20VA
IB2
1 2 3 4 5 6 7 8 9 10
WELD
FORGE
5V COM
110VAC
DANGER:
DO NOT CONNECT TO EXTERNAL
110VAC POWER SOURCE WITHOUT AN
ISOLATION TRANSFORMER
108 PERIPHERAL BOARD
INTERLOCK INDUSTRIES, INC.
WELD AND FORGE PRESSURE
108 AUXILIARY BOARD WIRING DIAGRAM
Title
PRESSURE REGULATOR AND PRESSURE SENSOR
Size
B
Document Number
155-017C-01
REV
Date:
May 31, 1995
Sheet
1 of
1
108PR.PD2

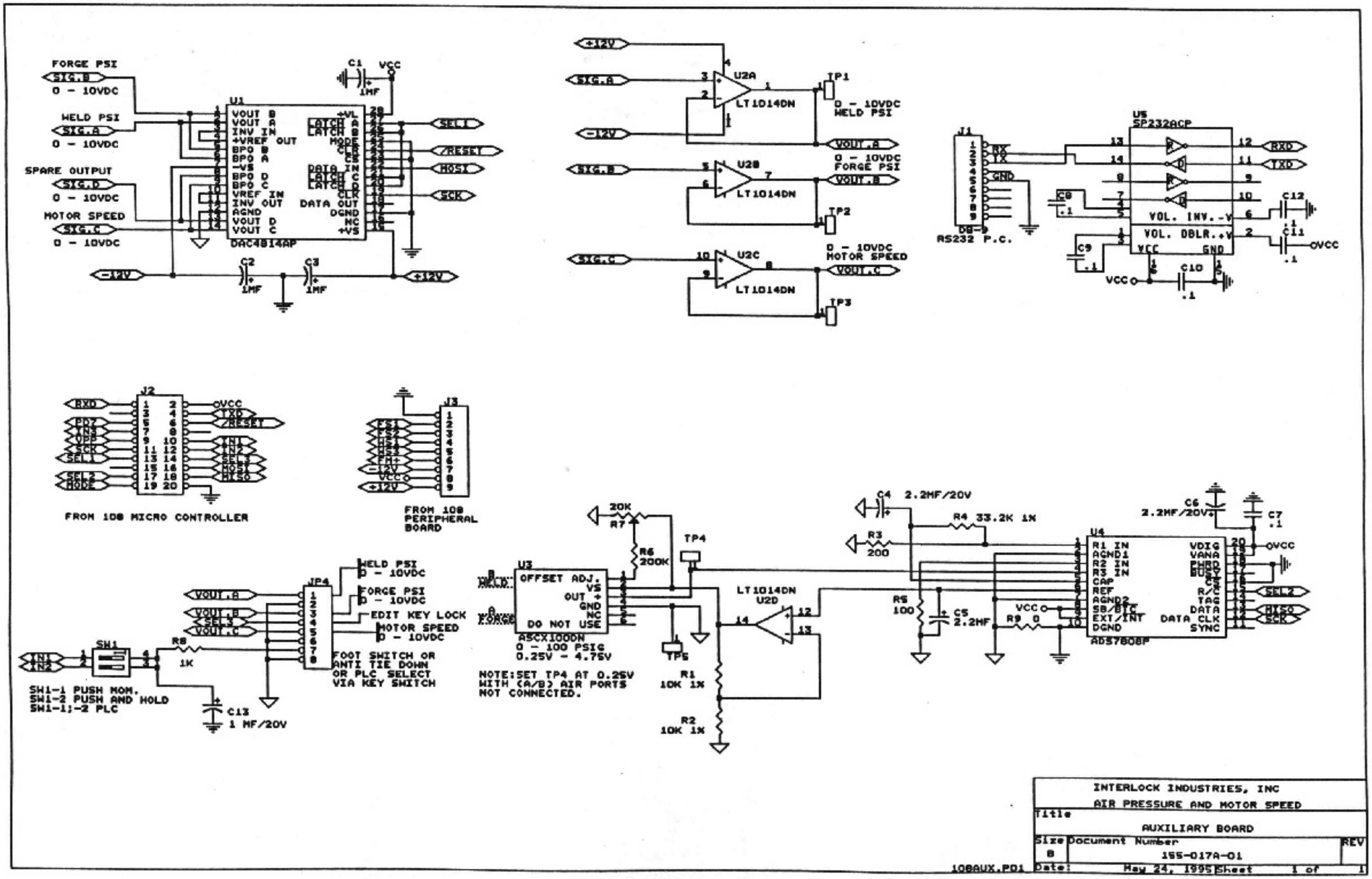
FORGE PSI
SIG.B
0 - 10VDC
HELD PSI
SIG.A
0 - 10VDC
SPARE OUTPUT
SIG.D
0 - 10VDC
MOTOR SPEED
SIG.C
0 - 10VDC
U1
DAC4814AP
VOUT B
VOUT A
INV IN
+VREF OUT
BPO B
BPO A
-VS
BPO D
BPO C
VREF IN
INV OUT
AGND
VOUT D
VOUT C
+VL
LATCH A
LATCH B
MODE
CLR
CS
DATA IN
LATCH C
LATCH D
CLK
DATA OUT
DGND
NC
+VS
C1
1MF
VCC
SEL1
/RESET
MOSI
SCK
-12V
C2
1MF
C3
1MF
+12V
+12V
SIG.A
-12V
U2A
LT1014DN
TP1
0 - 10VDC
HELD PSI
VOUT.A
SIG.B
U2B
LT1014DN
0 - 10VDC
FORGE PSI
VOUT.B
TP2
SIG.C
U2C
LT1014DN
0 - 10VDC
MOTOR SPEED
VOUT.C
TP3
J1
RX
TX
GND
DB-9
RS232 P.C.
U5
SP232ACP
VOL. INV.-V
VOL. DBLR.+V
VCC
GND
RXD
TXD
C8
.1
C9
.1
C10
.1
C11
.1
C12
.1
VCC
J2
RXD
PD7
IN3
VPP
SCK
SEL1
SEL2
MODE
VCC
TXD
/RESET
IN1
IN2
SEL3
MOSI
MISO
FROM 108 MICRO CONTROLLER
J3
FS1
FS2
HS1
HS2
HS3
FM+
-12V
VCC
+12V
FROM 108
PERIPHERAL
BOARD
JP4
VOUT.A
VOUT.B
SEL3
VOUT.C
HELD PSI
0 - 10VDC
FORGE PSI
0 - 10VDC
EDIT KEY LOCK
MOTOR SPEED
0 - 10VDC
FOOT SWITCH OR
ANTI TIE DOWN
OR PLC SELECT
VIA KEY SWITCH
SW1
IN1
IN2
R8
1K
SW1-1 PUSH MOM.
SW1-2 PUSH AND HOLD
SW1-1;-2 PLC
C13
1 MF/20V
U3
OFFSET ADJ.
VS
OUT +
GND
NC
DO NOT USE
ASCX100DN
0 - 100 PSIG
0.25V - 4.75V
20K
R7
R6
200K
TP4
TP5
NOTE:SET TP4 AT 0.25V
WITH (A/B) AIR PORTS
NOT CONNECTED.
LT1014DN
U2D
R1
10K 1%
R2
10K 1%
C4 2.2MF/20V
R3
200
R4 33.2K 1%
R5
100
C5
2.2MF
R9 0
U4
R1 IN
AGND1
R2 IN
R3 IN
CAP
REF
AGND2
SB/BTC
EXT/INT
DGND
VDIG
VANA
PWRD
BUSY
CS
R/C
TAG
DATA
DATA CLK
SYNC
AD57808P
C6
2.2MF/20V
C7
.1
VCC
SEL2
MISO
SCK
INTERLOCK INDUSTRIES, INC
AIR PRESSURE AND MOTOR SPEED
Title
AUXILIARY BOARD
Size
B
Document Number
155-017A-01
REV
Date:
May 24, 1995
Sheet
1 of
1
108AUX.PD1

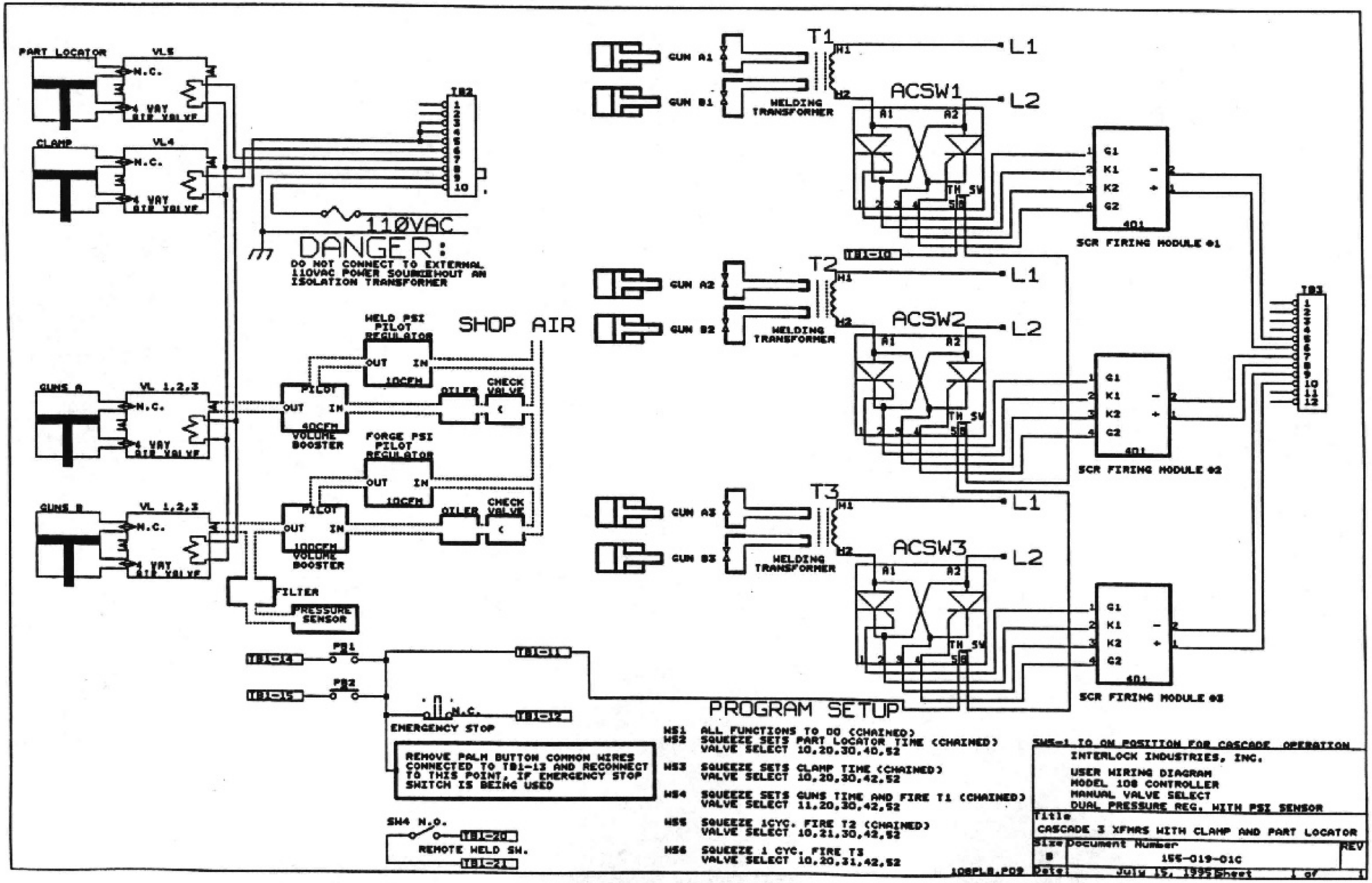
PART LOCATOR
VL5
N.C.
4 WAY AIR VALVE
CLAMP
VL4
N.C.
4 WAY AIR VALVE
TB2
1
2
3
4
5
6
7
8
9
10
110ØVAC
DANGER:
DO NOT CONNECT TO EXTERNAL 110VAC POWER SOURCEWHOUT AN ISOLATION TRANSFORMER
GUN A1
GUN B1
T1
H1
H2
L1
L2
WELDING TRANSFORMER
ACSW1
A1
A2
TH SW
S1
S2
1 G1
2 K1 -
3 K2 +
4 G2
4D1
SCR FIRING MODULE #1
TB1-10
GUN A2
GUN B2
T2
WELDING TRANSFORMER
ACSW2
SCR FIRING MODULE #2
TB3
1
2
3
4
5
6
7
8
9
10
11
12
SHOP AIR
HELD PSI PILOT REGULATOR
OUT
IN
10CFM
PILOT
40CFM VOLUME BOOSTER
OILER
CHECK VALVE
FORGE PSI PILOT REGULATOR
100CFM VOLUME BOOSTER
GUNS A
VL 1,2,3
GUNS B
FILTER
PRESSURE SENSOR
GUN A3
GUN B3
T3
WELDING TRANSFORMER
ACSW3
SCR FIRING MODULE #3
PB1
PB2
TB1-14
TB1-15
TB1-11
TB1-12
N.C.
EMERGENCY STOP
REMOVE PALM BUTTON COMMON WIRES CONNECTED TO TB1-13 AND RECONNECT TO THIS POINT, IF EMERGENCY STOP SWITCH IS BEING USED
SW4 N.O.
TB1-20
REMOTE WELD SH.
TB1-21
PROGRAM SETUP
MS1 ALL FUNCTIONS TO 00 (CHAINED)
MS2 SQUEEZE SETS PART LOCATOR TIME (CHAINED)
VALVE SELECT 10,20,30,40,52
MS3 SQUEEZE SETS CLAMP TIME (CHAINED)
VALVE SELECT 10,20,30,42,52
MS4 SQUEEZE SETS GUNS TIME AND FIRE T1 (CHAINED)
VALVE SELECT 11,20,30,42,52
MS5 SQUEEZE 1CYC. FIRE T2 (CHAINED)
VALVE SELECT 10,21,30,42,52
MS6 SQUEEZE 1 CYC. FIRE T3
VALVE SELECT 10,20,31,42,52
108PLB.PD9
SW5=1 IS ON POSITION FOR CASCADE OPERATION
INTERLOCK INDUSTRIES, INC.
USER WIRING DIAGRAM
MODEL 108 CONTROLLER
MANUAL VALVE SELECT
DUAL PRESSURE REG. WITH PSI SENSOR
Title
CASCADE 3 XFMRS WITH CLAMP AND PART LOCATOR
Size B
Document Number 155-019-01C
REV
Date July 15, 1995
Sheet 1 of 1

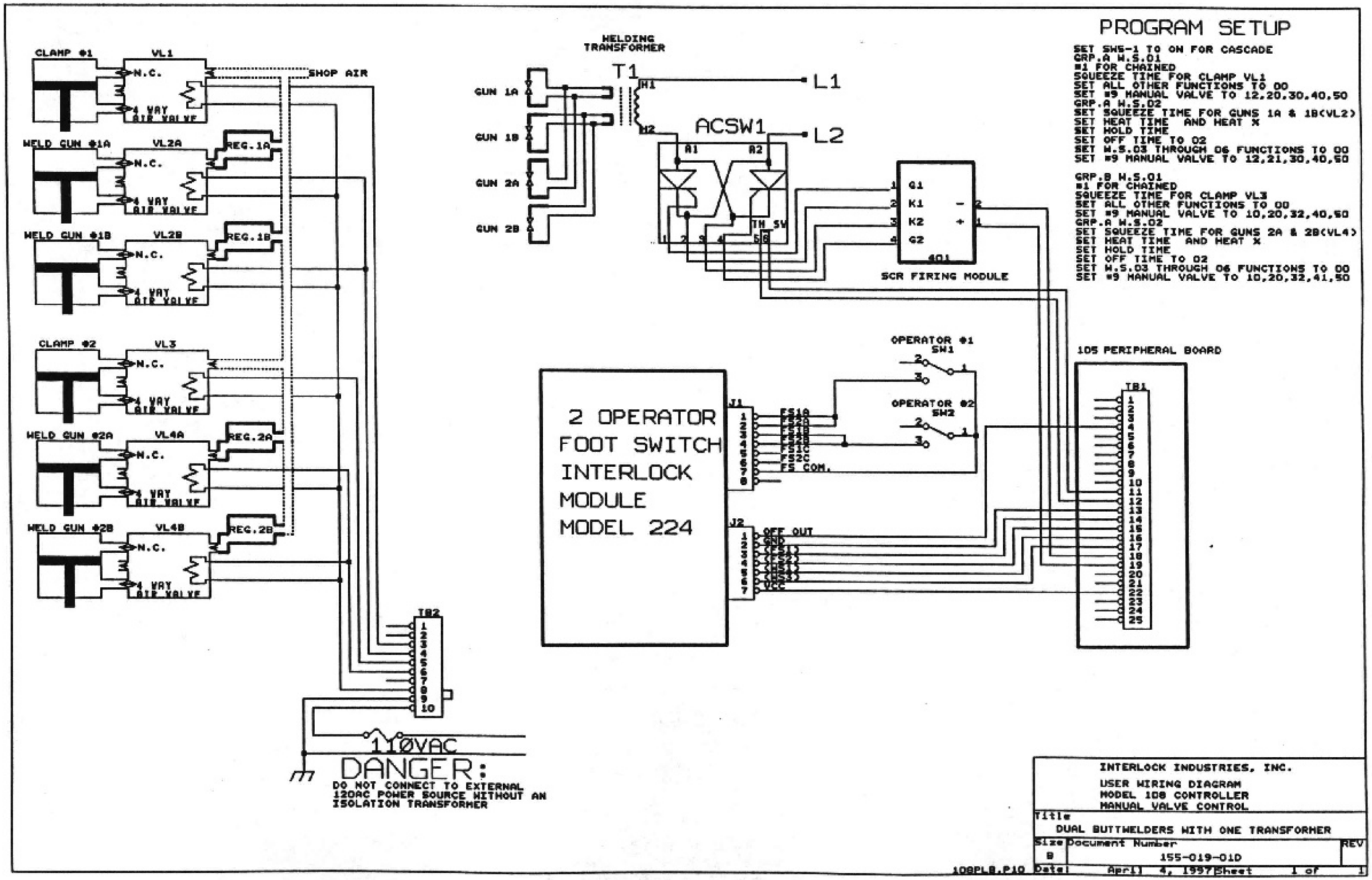

PROGRAM SETUP

```
SET SW5-1 TO ON FOR CASCADE
GRP.A W.S.01
#1 FOR CHAINED
SQUEEZE TIME FOR CLAMP VL1
SET ALL OTHER FUNCTIONS TO 00
SET #9 MANUAL VALVE TO 12,20,30,40,50
GRP.A W.S.02
SET SQUEEZE TIME FOR GUNS 1A & 1B(VL2)
SET HEAT TIME  AND HEAT X
SET HOLD TIME
SET OFF TIME TO 02
SET W.S.03 THROUGH 06 FUNCTIONS TO 00
SET #9 MANUAL VALVE TO 12,21,30,40,50

GRP.B W.S.01
#1 FOR CHAINED
SQUEEZE TIME FOR CLAMP VL3
SET ALL OTHER FUNCTIONS TO 00
SET #9 MANUAL VALVE TO 10,20,32,40,50
GRP.A W.S.02
SET SQUEEZE TIME FOR GUNS 2A & 2B(VL4)
SET HEAT TIME  AND HEAT X
SET HOLD TIME
SET OFF TIME TO 02
SET W.S.03 THROUGH 06 FUNCTIONS TO 00
SET #9 MANUAL VALVE TO 10,20,32,41,50
```

INTERLOCK INDUSTRIES, INC.

USER WIRING DIAGRAM
MODEL 108 CONTROLLER
MANUAL VALVE CONTROL

Title: DUAL BUTTWELDERS WITH ONE TRANSFORMER

Size	Document Number	REV
B	155-019-01D	

108PLB.P10 Date: April 4, 1997 Sheet 1 of 1

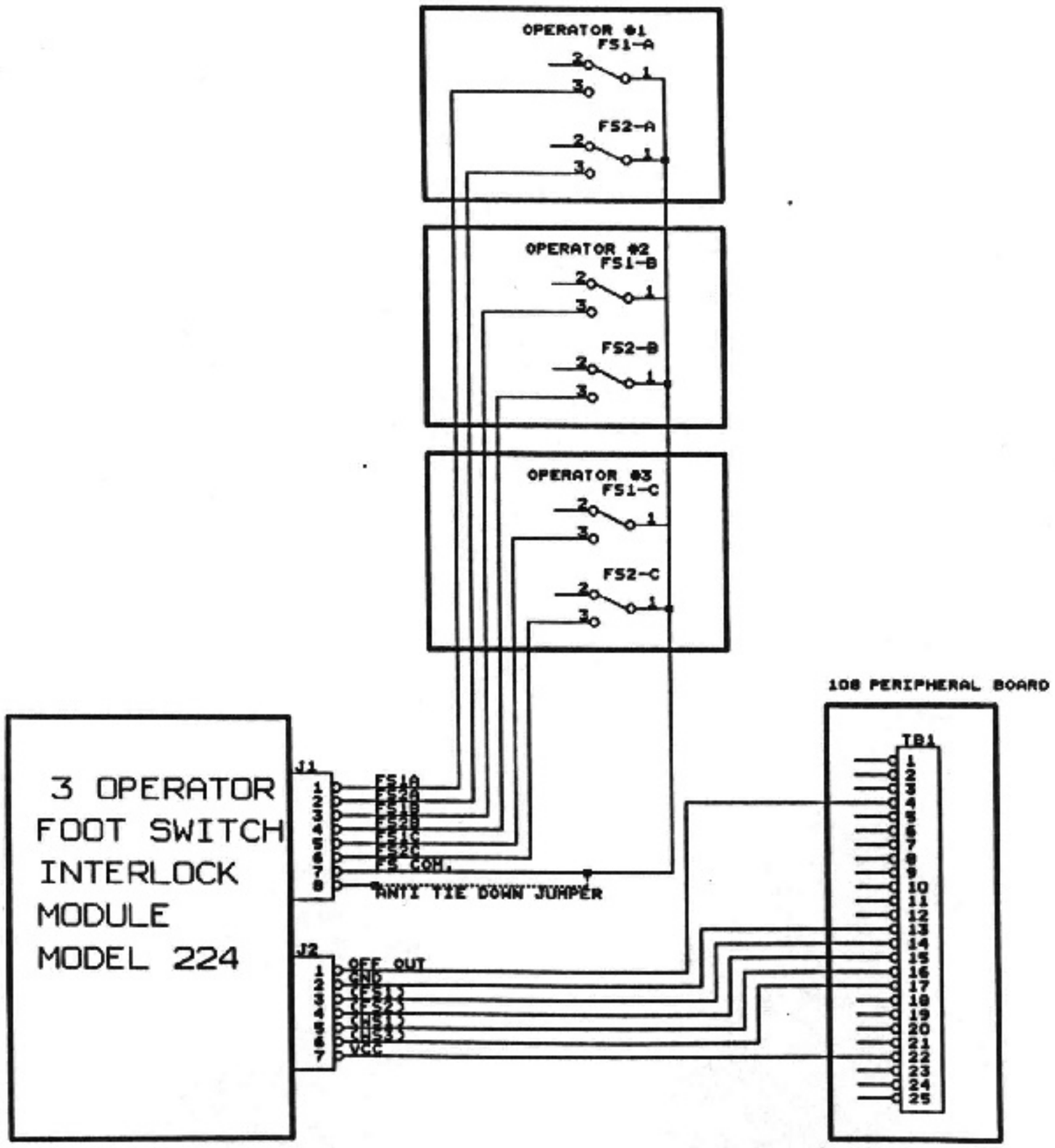

NOTE: CONNECT J1-7 TO J1-8 IF DUAL ANTI TIE DOWN PALM PUTTONS ARE USED

INTERLOCK INDUSTRIES, INC.
MODEL 108 CONTROLLER
USER WIRING DIAGRAM

Title
MODEL 224 3 OPERATOR FOOT SWITCH INTERLOCK

Size	Document Number	REV
B	155-019-01E	

108PLB.P11 Date: October 11, 1995 Sheet 1 of 1

PERIPHERAL BOARD
MODEL 108
ASSY 155-017-02

1 PHASE TO 3 PHASE CONVERTOR
MODEL 326

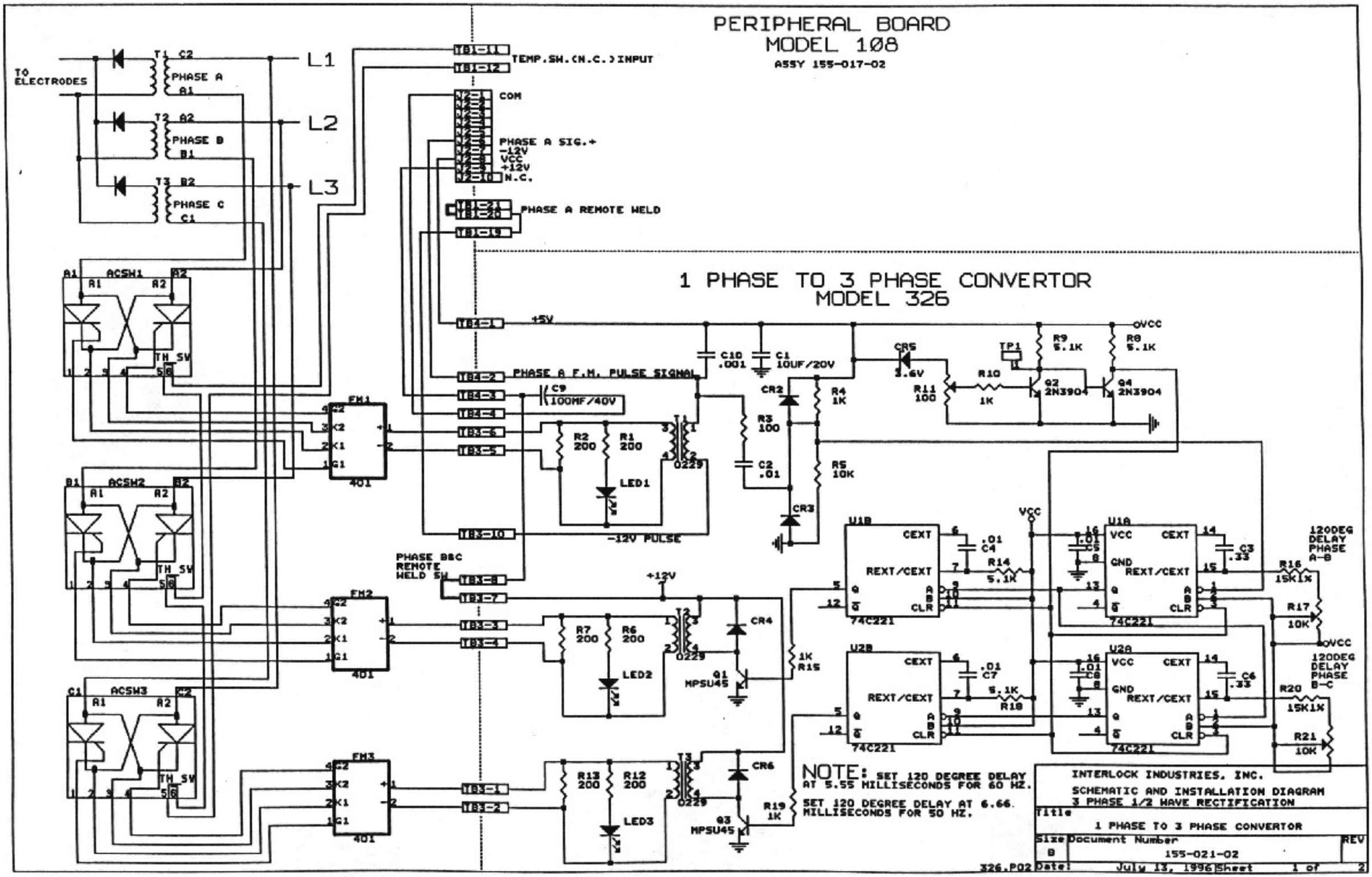

NOTE: SET 120 DEGREE DELAY AT 5.55 MILLISECONDS FOR 60 HZ.

SET 120 DEGREE DELAY AT 6.66 MILLISECONDS FOR 50 HZ.

INTERLOCK INDUSTRIES, INC.

SCHEMATIC AND INSTALLATION DIAGRAM
3 PHASE 1/2 WAVE RECTIFICATION

Title		
1 PHASE TO 3 PHASE CONVERTOR		
Size: B	Document Number: 155-021-02	REV
326.P02	Date: July 13, 1996	Sheet 1 of 2

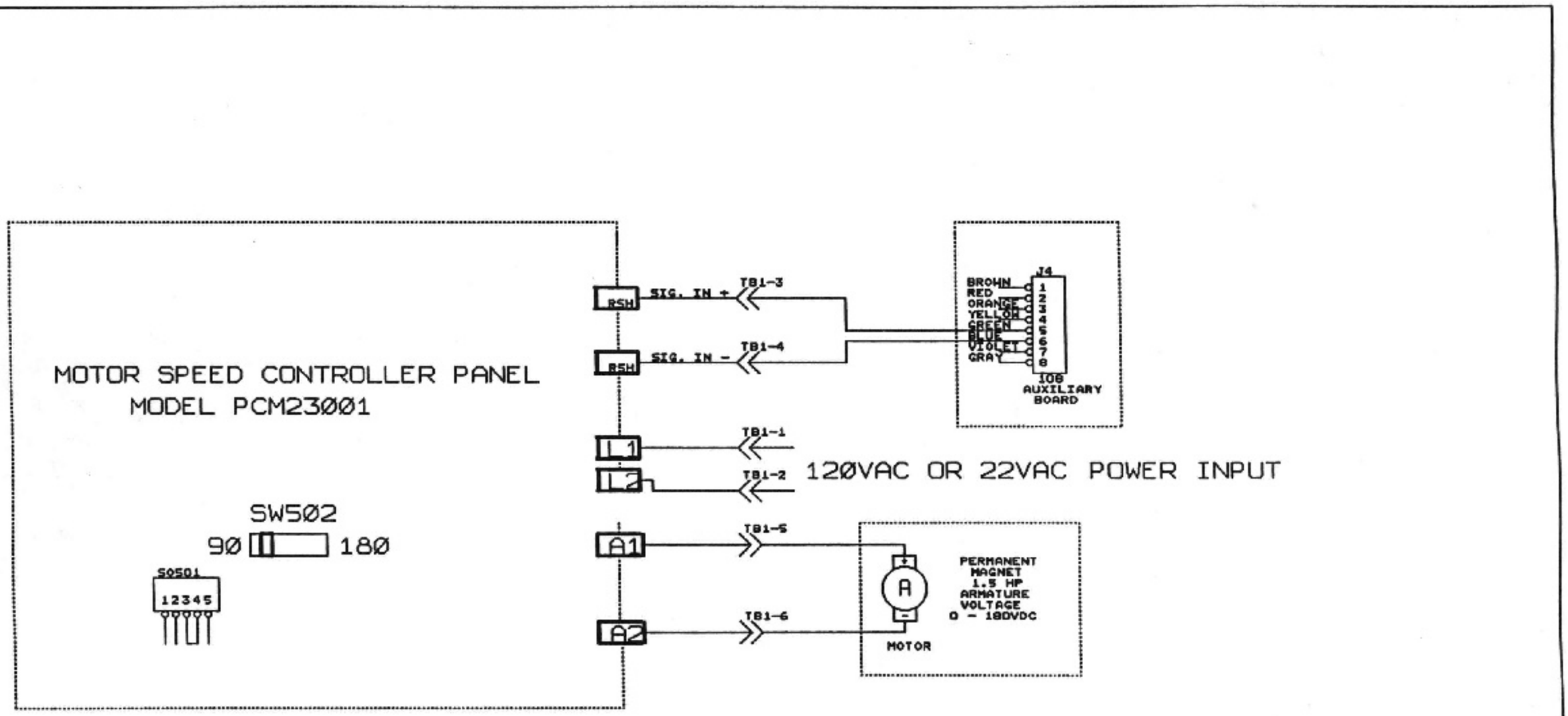

NOTE:
THIS MOTOR CONTROLLER IS TO BE USED
WITH PERMANENT MAGNET MOTORS ONLY.

FOR Ø - 90VDC ARMATURE VOLTAGE
110VAC POWER INPUT, FOR Ø - 180VDC ARMATURE VOLTAGE
220VAC POWER INPUT
SWITCH SW502 MUST BE SET TO 90 FOR ØV - 90VDC ARMATURE OUTPUT
AND TO 180 FOR Ø - 180VDC ARMATURE OUTPUT

INTERLOCK INDUSTRIES, INC. ASSEMBLY WIRING DIAGRAM REGENERATIVE DRIVE		
Title: 108MSC MOTOR SPEED CONTROL		
Size: B	Document Number: 146-010-02	REV: B
Date: May 4, 1998	Sheet 1 of 1	

108PR.P03

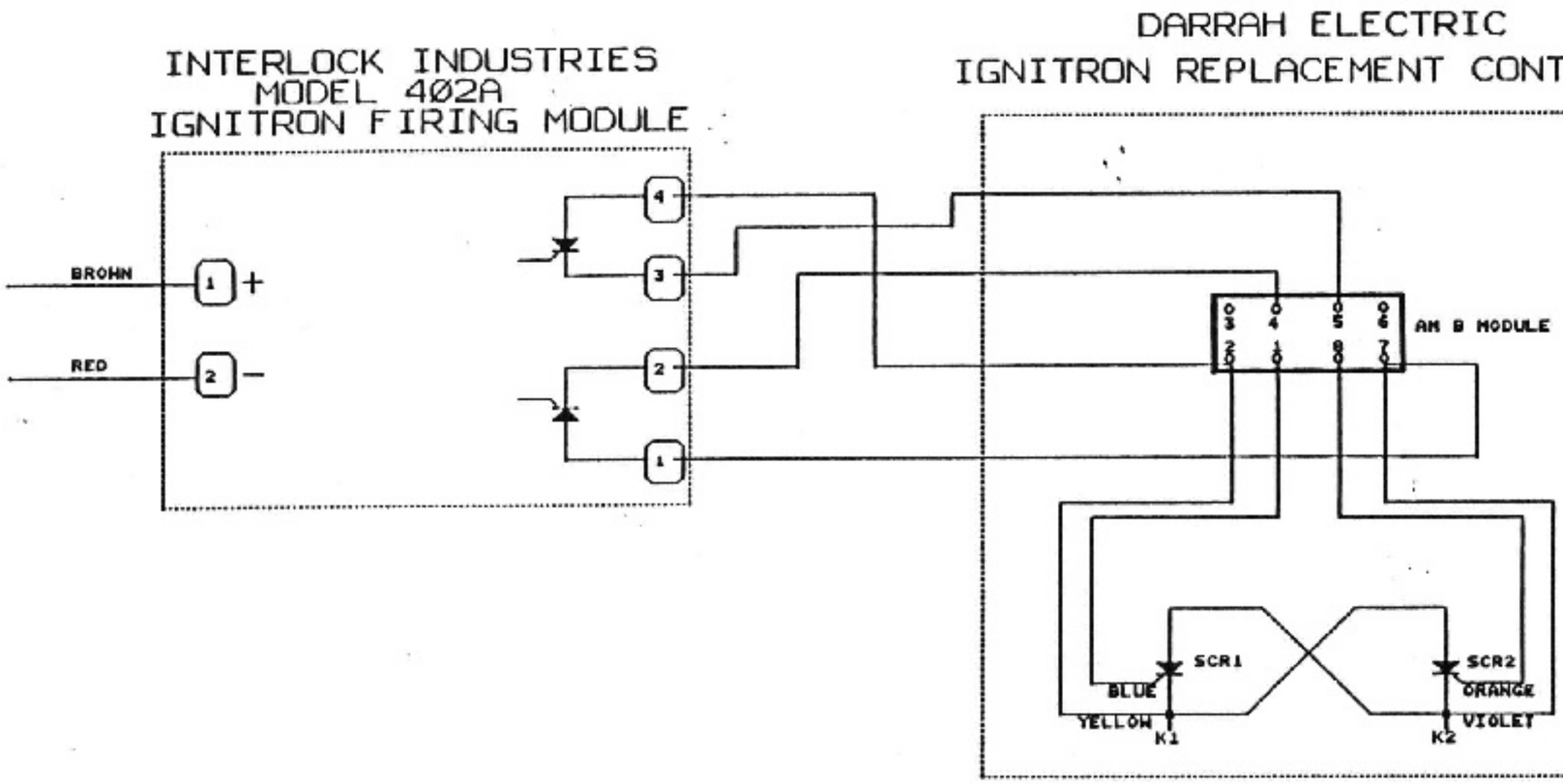

INTERLOCK INDUSTRIES, INC.		
DARRAH ELECTRIC IGNITRON REPLACEMENT WIRING DIAGRAM		
Title: 402A IGNITRON FIRING MODULE		
Size: B	Document Number: 150-022-01	REV
Date: July 26, 1991	Sheet 1 of 1	

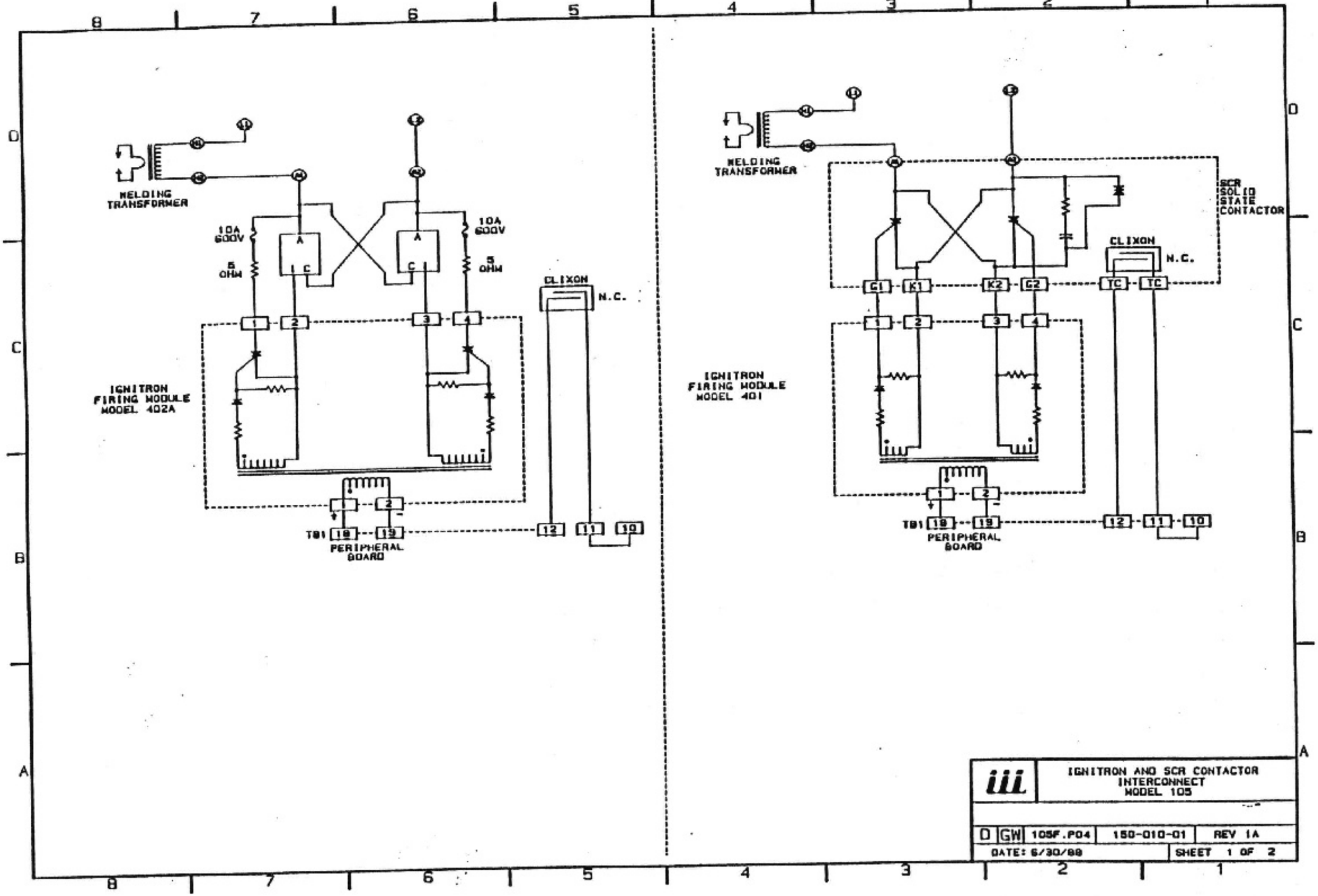

iii	IGNITRON AND SCR CONTACTOR INTERCONNECT MODEL 105			
D	GW	105F.P04	150-010-01	REV 1A
DATE: 6/30/99			SHEET 1 OF 2	