INTERTRON INDUSTRIES, INC.

MODEL 3000

MID-FREQUENCY INVERTER POWER SUPPLY AND CONTROLLER FOR RESISTANCE WELDING

REFERENCE MANUAL

REV. C AUGUST 16, 2006

www.intertron-ind.com

CONTENTS

CONTENTS....1
GENERAL DESCRIPTION....2
BASIC FEATURES....3
END USER PASSCODE....7
CLEAR MEMORY....7
ELECTRONIC PRESSURE REGULATION AND MOTOR SPEED CONTROL....8
*29 WELDING TRANSFORMER KA/DUTY CYCLE LIMITS....8
*30 PRINT....9
*31 FACTORY SETUP VIEW....9
*32 SEQUENCE SELECT....9
*33 DELETE WS....9
*34 END USER PASSWORD EDIT....10
MINIDIP SWITCH AND SW7 SETUP MODE....10
INTERFACE INPUTS AND OUTPUTS....11
OPERATING FEATURES....11
OPERATOR FRONT PANEL INTERFACE....11
WELD SEQUENCE OPERATING PARAMETERS....12
WELD STEPPER PROGRAMMABLE FUNCTIONS....12
VALVE OPERATIONAL SPECIFICATIONS....13
MULTI GUN MANUAL VALVE SELECT MODE....14
WELD COUNTER....15
ANTI TIE DOWN....15
OPERATION FEATURES SELECTION FRONT PANEL *_ _ 15A
MODEL 3000 FRONT PANEL....16
FRONT PANEL SEQUENTIAL DISPLAY WINDOW....17
INTERFACE TO PLC "END OF WELD ERROR", "KA ERROR" FEEDBACK..24
END OF WELD INTERFACE SIGNAL TO PLC....25
PC M3K WELD SCHEDULE CONTROL SOFTWARE....25A
PC PORT CONFIGURATION....25C
MODEL 3000 WELD CONTROLLER INSTALLATION INSTRUCTIONS....26
SCHEMATICS....28

GENERAL DESCRIPTION

This power supply uses the three phase power source 480volts A.C. typically available in most power plants and converts it to a low voltage – hi current D.C. to be used with all types of resistance welding machines.
The most significant advantage this type of power source has over the 60 Hertz, S.C.R. switching type power supplies used in the past 40 years, is that it can deliver very precise secondary currents from very short to very long durations, and it can greatly increase the compression of weld current in time, thus providing various types of improvements in weld quality.

MID FREQUENCY IGBT DRIVERS are cooled efficiently by water-cooled copper blocks.

BASIC FEATURES

The Model 3000 controller offers several great advantages over existent weld controllers of similar type, on the market now, in the beginning of this new century.

1. Most user-friendly controller. It takes less then 5 minutes to learn how to program a weld schedule.
2. The controller has stored in its memory the Welding Transformer and Rectifier " DUTY CYCLE vs. HEAT TIME vs. SECONDARY CURRENT " profile. With that profile map built in its program memory, and means of recognizing which transformer manufacturer and part number it is using, it has the unique advantage of providing the use of maximum available power without allowing the operator to program welding current characteristics which may damage or destroy the power supply or the welding transformer. If improper programming is used, or during operation the duty cycle is exceeded. The controller will display the error "Too much heat". The controller display will show the Heat Time and Duty Cycle allowed for the desired current, by keying in *29.
3. Weld schedule 000 accessed via the end user pass code, is used based on the welding machine application, to assign and make active the following weld functions:
    a. SQUEEZE DELAY TIME — cycles or milliseconds
    b. SQUEEZE TIME — cycles or milliseconds
    c. FORGE DELAY TIME — cycles for milliseconds
    d. UPSLOPE HEAT START — Kamps or heat percent
    e. UPSLOPE TIME — cycles or milliseconds
    f. IMPULSES — (cool time + weld heat time)
    g. COOL TIME — cycles or milliseconds
    h. WELD HEAT TIME — cycles or milliseconds
    i. WELD HEAT — Kamps or heat percent
    j. DOWNSLOPE TIME — cycles or milliseconds
    k. DOWNSLOPE HEAT END — Kamps or heat percent
    l. QUENCH TIME — cycles or milliseconds
    m. TEMPER TIME — cycles or milliseconds
    n. TEMPER HEAT — Kamps or heat percent
    o. HOLD TIME — cycles or milliseconds
    p. OFF TIME — cycles or milliseconds

Note: heat percent is defined as a percent of the maximum Kamps

4. AUXILIARY FUNCTIONS
   a. WELD PRESSURE 00-99 PSI OR 000-682 KPA
   b. FORGE PRESSURE 00-99 PSI OR 000-682 KPA
   c. HI-LOW weld cylinder differential pressure 00-99 PSI OR 000-682 KPA
   d. KAMPS LIMIT MODE a. per impulse b. weld average
   e. + LIMIT KA maximum allowable KA deviation from preset secondary weld current.
   f. – LIMIT KA minimum allowable KA deviation from preset secondary weld current.
   g. MOTOR SPEED 00-99 % of maximum speed
   h. WELD HEAT STEPPER ka or % heat per step increase
   i. WELD STEPPER weld PSI or KPA per step increase
   j. PROGRAM EDIT LOCK pass code locks or unlocks weld schedule editing
   k. WELDING TRANSFORMER KA / DUTY CYCLE LIMITS
   l. PRINT downloads to PC the weld schedule No.-WELD TIME-WELD KAMPS-and WELD COUNTER output displaying the number of welds made.
   m. FACTORY SET UP VIEW allows viewing of the following factory setup; mode, coil gain, IGBT I.D. resistor and water saver timer.
   n. SEQUENCE SELECT In weld schedule 000 the program functions such as Upslope, or Temper or any other program functions, may be enabled or disabled, depending on the end user weld application of the welding machine. The shortest weld schedule program may be set only with WELD HEAT TIME and WELD HEAT being active. Once this is done, all 999 weld schedules will have only those functions active.
      Also push the green key to choose default units of measure
      A: KA RMS or % HEAT of max. KA
      B: MILLISECONDS or CYCLES
   o. DELETE W.S. DATA This function allows the operator to delete a weld schedule data, setting all parameters to what is predefined in weld schedule 000.
5. *00 Enables selection of weld schedule to be used. Key in a 1 to 3 digit weld schedule number. Push the * key to exit back to stand by mode.
6. *01 CHAIN MODE. Front panel lamp shows when a weld schedule is linked to the next one. Multiple weld schedules may be chained in sequence, so multiple HEAT TIME and KA levels may be used for complex weld schedules. Note: This function is used only for special applications.

In the CHAIN mode, push the red key to advance to CHAIN-SUCCESSIVE mode.
The green key will enable or disable the selected CHAIN function.
In the CHAIN mode, the front panel LED will turn on for the weld schedule selected with an active CHAIN feature. At the end of that weld schedule, the weld controller will automatically index to the next weld schedule and execute it. At the end of the last selected consecutive weld schedule, the weld controller will return to the first selected weld schedule in the sequence and stop.
In the CHAIN-SUCCESSIVE mode, when the first selected weld schedule in the sequence is activated, the front panel CHAIN LED will flash (on - off) at a slow rate. When the weld is initiated by the foot switch inputs, the controller will execute the weld program from squeeze time to off time and stop. At the end of off time, the front panel LED will change the flashing rate to a fast flash rate, indicating to the operator that the weld has been executed. The front panel display, will also show the HEAT TIME and HEAT KA for the executed weld and wait to initiate the next consecutive weld schedule in the CHAIN - SUCCESSIVE loop. When the foot switch inputs FS1 and FS2 are released and reinitiated, the weld controller will switch to the next successive weld schedule and execute it.
If a weld schedule in the loop is being edited, the controller will execute that weld schedule again with the new weld data.

7. *02 WELD COUNTER. A weld counter may be enabled or disabled for each weld schedule. The weld counter counts total number of welds made and halts the controller when the preset number of welds is reached. The front panel light will flash, and it can be reset to zero by pushing the red key. The weld counter when enabled will count welds with secondary current of 500 amps or greater KA value. The weld counter will count number of welds in spot, roll spot and seam. Third mode of counter operation is displayed by pushing the "RED" key from the weld counter "WELD COUNT LIMIT" window. The front panel display will allow the operator to enter a "REPEAT WELD SEQ.". When this is set, the controller will repeat the weld schedule sequence xxxx times then halt. Up on release of the foot switch, the counter will reset, and the repeat sequence will start again at the next foot switch closure.
Note: The repeat switch must be on, for the repeat sequence to function. If the foot switch is released in the middle of the repeat squence, the controller will halt, and reset the repeat sequence counter.

8. The sequential weld functions SQUEEZE DELAY TIME though OFF TIME can be scrolled through by pushing the RED KEY on the front panel keyboard. They can also be directly accessed by pushing the following keys:
   *03 for Squeeze Delay Time
   *04 for Squeeze Time
   *05 for Forge Delay Time
   *06 for Upslope Heat Start
   *07 for Upslope Time
   *08 for Impulses
   *09 for Cool Time
   *10 for Weld Heat Time
   *11 for Weld Heat
   *12 for Downslope Time
   *13 for Downslope Heat End
   *14 for Quench Time
   *15 for Temper Time
   *16 for Temper Heat
   *17 for Hold Time
   *18 for Off Time

   The Auxiliary Functions can also be directly accessed by pushing the following keys:
   *19 for Weld Pressure
   *20 for Forge Pressure
   *21 for Hi-Low Pressure
   *22 for Kamps Limit Mode
   *23 for + Limit KA
   *24 for - Limit KA
   *25 for Motor Speed
   *26 for Weld Heat Stepper
   *27 for Weld Pressure Stepper
   *28 for Program Edit Lock
   *29 for Welding Transformer Limits
   *30 for Print Weld Data
   *31 for Factory Setup View
   *32 for Sequence Select in Weld Schedule 000
   *33 for Delete Weld Schedule Data
   *34 for Password Edit

Model 3000 end user pass code

The following functions require a 4-digit pass code in order to be accessed and edited.

1. Program Edit Lock (*28)
2. Sequence select, in weld schedule 000 (*32)
3. Cycles or milliseconds, KA or heat select for all weld schedules and preset in weld schedule 000.
4. Water saver timer (*38) in weld schedule 000 preset by default to one minute, may be changed to up to 5 minutes.
5. PSI or KPA units of pressure measurement when in weld schedule 000 push (*39) the use the green keyboard button to switch between PSI and KPA. Once set, that will be the default for all weld schedules.

The factory preset pass code is the 4-digit number 1234.
To alter the pass code to a different 4 digit number push on the keyboard *34, the controller display will show "ENTER 4 DIGIT PASSWORD" key in the numbers 1234. As the numbers are keyed in, the display will show *** after the last digit is entered, the display will show "ENTER NEW PASSWORD" key in a 4 digit number of your choice. Key in the last password entry. The new number is saved in memory, and the display will return to standby mode. If an error is made in entering the new password, the screen will display "INVALID PASSWORD".
The default passcode 1234 is returned and active.

Clear model 3000 Controller memory.
Turn power off, locate SW7 (minidip switch), record SW7 switch position, set all 4 switches to on, power on, then off the weld controller, set SW7 switches to their original position, close cabinet and power on controller. All weld schedules are now reset to zero.

Note: SW7 minidip switch is a red colored switch block with 4 switches located on the back of the controller processor board.

SW7

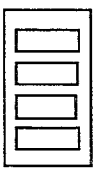

Electronic pressure regulation and motor speed control

The model 3000 controller has the ability to store in its memory, with each weld schedule, a 2-3 digit value for weld pressure and a 2-3 digit value for forge pressure, and a two digit number for % of maximum motor speed control.
From the standby mode, push key *19 to key in WELD Pressure from 00 to 99 PSI or 000 to 682 kPa then push * key to exit back to the standby mode.
From the standby mode, push key *20 to key in FORGE Pressure from 00 to 99 or 000 to 682 kPa then push the * key to exit back to the standby mode.
From the standby mode, push key *25 to key in MOTOR SPEED from 00 to 99 then push the * key to exit back to standby mode.
The pressure regulators and the motor speed outputs are factory pre-adjusted.
The installation drawings show the electrical and air connections required for the pressure regulators and the volume boosters.
The motor speed control output is connected to an optically isolated DC motor speed controller with an armature output of 0-90 VDC for a 120 VAC input, or 0-180 VDC for a 220 VAC input. DC motors from fractional HP to 1.5HP may be used .
A differential pressure sensor connected to the upper and lower sides of the weld cylinder reads that pressure at the beginning of weld time. If that pressure does not equal the preset pressure set by *21 HI-LOW (weld) Pressure, it will hold the control in SQUEEZE TIME until the pressures are the same value, + or - 1.00 PSI, + or - 7.00 kPa. Push the red key to scroll to the next screen. It will display "LAST SEQ. PRESS. This is last welder sequence Pressure read by the differential pressure sensor. If HI-LOW Pressure is set to 00, than this function is ignored, and the controller will exit squeeze time only as a function of SQUEEZE TIME value setting.

*29 Welding transformer KA/Duty cycle limits

This display alows the end user to view the welding transformer maximum allowable KA and heat time for a specifiedoperating duty cycle.

1. In Spot mode, the controller will put the minimum time in "Off Time" when the weld schedule is edited.
2. In Seam mode, the controller will put the minimum in "Cool Time" when edited.
3. In Roll Spot mode, the controller will put the minimum time in "Hold time" when edited.

***30 Print (Optional)**

Push *30, the display will show "Print weld data every xxxx welds". key in a 1 to 4 digit number. Push the * key to exit.

The printer serial port when connected to a laptop, will download up to 10 heat impulses (Weld time and KA) and transmit that information every xxxx welds as programmed, in spot, seam or roll spot. Use Windows hyperterminal and set 9600 Baud - 8 Data Bit - Parity None - 1 Stop Bit - Flow control None.

Print out display on P.C. laptop.

WS001 WC0000
0000MS 0.00KA
WELD PRESSURE=00 psi
FORGE PRESSURE=00 psi
WELD START 00 psi
WELD END 00 psi

***31 Factory set up view**

This mode displays one of four different factory set up modes for that specific weld controller.

A. 0. Spot welder with retraction
   1. Standard type spot welder with no retraction
   2. Sciaky type spot welder with key lock valve
   3. Multi valve select mode

B. Coil gain adjustment. This is a factory adjustment for a specific secondary current measurement coil supplied by the welding transformer manufacturer.

C. Water saver valve, timer value.

Push the red key to scroll and view all that data.

***32 Sequence select**

Upon intial installation of the welding machine, based on the general application, the end user has the option to set several default values for all weld schedules. They are all set in weld schedule 000.

1. From the standby mode push keys *00 select weld schedule 000 then push the red key . Push the default password 1-2-3-4. Push *32 The first sequence function will appear on the screen.
   Push the green key to set this function in of the two modes:
   A. Enabled
   B. Disabled
   If disabled, it will no longer appear when the sequencial functions are scrolled. Push the red key to scroll through all functions "Squeeze through Off time". Push the * key to exit to standby mode.

***33 Delete WS**

Push *33, use the green key to select yes or no in deleting that weld schedule. Push * to exit to standby mode. If the weld schedule was deleted, all data entered except the default values intially set in W.S. 000 will be set at zero.

***34 End user password edit**

The controller is preset at the factory with a default code of 1234 to change tha code push *34 key in the numbers 1234.
Key in the newly selected 4 digit password.
Key in the newly selected 4 digit password again.
The controller will return to standby mode .
If you loose the new entered code, check the auxiliary edit lock sheet supplied separately with the manual for information on how to re-enter the original factory default password.

Minidip switch SW7 setup mode.

In the center of the processor control board is a red block that includes 4 minidip switches.
They are labeled:

SW7 #1 On, converts Antitie down input palm button from "Momentary" to "Push and Hold".

SW7 #2 On, enables Buttweld operation. Used only on Buttweld machines. In this mode, first stage foot switch turns on the clamp valve, and second stage foot switch turns on the upset valve.

SW7 #3 Enables the controller to operate when the external interlock scanner allows it to weld.

SW7 #4 Enables Seam/Roll Spot operation.

INTERFACE INPUTS AND OUTPUTS

1. Interlock with other welder controllers and Interlock Scanner
2. RS232 to upload and download weld schedules to PC laptop and download weld data to PC in spot mode, from weld to weld. In windows, use hyper terminal at 9600 baud.

OPERATING FEATURES

SPOT WELD – SEAM WELD – ROLL SPOT WELD – BUTT WELD

1. Fully programmable 999 weld schedules
2. First and Second stage foot switch inputs
3. Retraction and Tip Dress inputs
4. FS Fast SQUEEZE override (In standard Spot mode) and heat override in Butt-weld mode
5. Intermittent drive motor ON/OFF control
6. Weld checker checks weld impulse KA window deviation error per impulse or weld average
7. External key lock switch disables all weld schedule editing.
   Note: This key lock is not available for welders with retraction and key lock valve. In this mode, only edit lock pass code will lock out editing, for each weld schedule individually.

OPERATOR FRONT PANEL INTERFACE

1. 2 lines, 18 digits each, alpha numeric display
2. 0 – 9 keyboard
3. * key and RED scroll key
4. CYC / MSEC ; %H / K unit of measure conversion green key
5. Chained and Weld Counter display LED's
6. Repeat sequence switch
7. Weld ON switch
8. Seam – Spot – Roll spot switch

WELD SEQUENCE OPERATING PARAMETERS

1. Squeeze delay time: 000 - 499 cycles (1 cycle = 20 milliseconds)
2. Squeeze time: 000 - 499 cycles
3. Forge Delay time 0000 - 9999 milliseconds
4. Upslope heat start: 00H% - 99H% or 00.0KA - 99.9KA
5. Upslope heat time: 000 - 499 cycles or 0000 - 9999 milliseconds
6. Impulses (heat time + cool time): 000 - 999
7. Cool time: 0000 - 1499 cycles or 00000 - 29999 milliseconds
8. Weld time: 000 - 499 cycles or 0000 - 9999 milliseconds
9. Weld heat: : 00% - 99% or 00.0KA - 99.9KA
10. Downslope heat time: 000 - 499 cycles or 0000 - 9999 milliseconds
11. Downslope heat end: 00% - 99% or 00.0KA - 99.9KA
12. Quench time: 000 - 499 cycles or 0000 - 9999 milliseconds
13. Temper heat time: 000 - 499 cycles or 0000 - 9999 milliseconds
14. Temper heat: 00% - 99% or 00.0KA - 99.9KA
15. Hold time: 0000 - 1499 cycles or 00000 - 29999 milliseconds
16. Off time: 0000 - 1499 cycles or 00000 - 29999 milliseconds

All above functions can be switched at the push of the green button on the front panel, from KA to % heat of max. KA, or from milliseconds to equivalent value in cycles.

WELD STEPPER PROGRAMMABLE FUNCTIONS

1. Weld current Heat % per step or KAMPS per step
2. Number of welds per step
3. Total number of steps
4. Weld PSI or KPA per step
5. Number of welds per step

VALVE OPERATIONAL SPECIFICATION

1. RETRACTION or CLAMP VALVE 120VAC
2. SQUEEZE VALVE 120VAC
3. WATER SAVER VALVE 120VAC
4. CLUTCH / BRAKE or KEY VALVE 120VAC
5. FORGE / TIP DRESS VALVE 24VDC

1. The RETRACTION VALVE is enabled by a mechanically locked foot switch.
2. A factory set option, allows the RETRACTION VALVE to operate in conjunction with a KEY LOCK VALVE, using a head down, key in and key out limit switches.
3. The SQUEEZE VALVE is enabled or disabled with the first stage foot switch, and held on till the end of HOLD TIME when second stage foot switch is engaged and weld sequence starts.
4. The WATER SAVER VALVE is enabled with the second stage foot switch, and stays on for 1 minute, or released as soon as the retraction foot switch is turned off. With the option to change the 1 minute, to longer times, up to 5 minutes.
5. The CLUTCH / BRAKE VALVE in SEAM mode, is enabled with the second stage foot switch, and it stays on till the foot switch is released, and the last weld sequence is completed.
6. The KEY LOCK VALVE is factory enabled and used exclusively with welding machines which have a retraction valve and the following 3 limit switches: HEAD DOWN limit switch; KEY OUT limit switch; KEY IN limit switch.

KEY LOCK OPERATION:

a. Retraction foot switch closes and retraction valve is energized.
b. Head Down limit switch closes and key valve is energized.
c. Key out limit switch turns off and key in limit switch turns on.
d. Retraction valve de-energizes.
e. The weld controller is ready to acknowledge first stage foot switch closure.

1. The FORGE VALVE is energized by the controller program called FORGE DELAY TIME. The time delay counter is initiated at the end of SQUEEZE TIME. The time delay may be set in milliseconds or cycles. One cycle = 20 milliseconds
   At the end of delay count, the FORGE VALVE is energized, and it stays on till the end of HOLD TIME.
2. BUTT-WELD OPERATING MODE
   a. The RETRACTION VALVE functions as the CLAMP VALVE, and it is energized by the first stage foot switch.
   b. The SQUEEZE VALVE functions as the UPSET VALVE, and it is energized by the second stage foot switch, at the end of squeeze delay time

MULTI GUN MANUAL VALVE SELECT MODE

This is a factory preset mode.
In this aplication, the 5 valves VL1 through VL5 used for specific function in a standard one weld valve welding machine, can be selected to be used as a weld valve, one per weld schedule.
In this operating mode, all valves will turn ON at the beginning of SQUEEZE TIME and turn OFF at the beginning of OFF TIME.
To enable that function to be entered from the welding controller front panel, the "*03 SQUEEZE DELAY TIME" has been relabled: *03 MANUAL VALVE SELECT
If several weld schedules are chained together, the operator can scroll to the MANUAL VALVE SELECT function by pushing the RED select key on the keyboard. The display will show MANUAL VL. SEL
Key in a number from 1 to 5, or use the green key to choose a number. The number 0 will disable a valve selection.
Valves VL1-VL2-VL3-VL4 have to have a 120VAC 0.12A coil and VL5 24VDC 0.25A coil. Check installation drawing 155-036-01-68 labeled SPOT - MANUAL VALVE SELECT.

WELD COUNTER

A 10,000 WELD COUNT COUNTER COUNTS AND STORES ALL THE WELDS MADE FOR EACH ACTIVE WELD SCHEDULE.
From the STANDBY MODE, push *02 key, on the front panel
The display will show 3 select modes:

Use the green key to select mode on or off.
Use the red key to sequence to next mode.

a. Enable counter. When enabled, the LED *02 on the front panel will turn on.
b. Disable counter. LED *02 on the front panel will be off.
c. Reset counter. The counter on that weld schedule will reset to zero.
d. Weld counter limit. the counter limit is adjustable from 00000-10000. factory default is 10000
e. When the counter reached it's limit, the weld controller will stop welding, the front panel LED will start flashing.
f. Counter Reset will enable welder to continue welding.
g. The front panel display in the stand by mode, will display on the upper right hand side WC0000, the welds made with that weld schedule.

ANTI TIE DOWN

Enter *40
Whatever is displayed in the *40 option is the Mode selected for weld initiation.
Push the Green Key to select the different modes.
Entering the USER password to change modes. The three following modes are available for weld initiation.
Anti Tie Down Disabled
Anti Tie Down Until End of Hold Time
Anti Tie Down Until End of Squeeze Time

OPERATION FEATURES SELECTION FRONT PANEL *__

*00 "Select Weld Schedule
*01 "Chained or Chained-Successive
*02 "Weld Counter, Reset Counter, Weld Count Limit, Repeat Weld Sequence.
*03"SQUEEZE DEL TIME"
*04 "SQUEEZE TIME"
*05 "FORGE DELAY TIME"
*06 "UPSLOPE START "
*07 "UPSLOPE TIME"
*08 "IMPULSES"
*09 "COOL TIME"
*10 "WELD TIME"
*11 "WELD HEAT KA"
*12 "DOWNSLOPE TIME"
*13 "DOWNSLOPE END"
*14 "QUENCH TIME"
*15 "TEMPER TIME"
*16 "TEMPER HEAT"
*17 "HOLD TIME"
*18 "OFF TIME"
*19 "WELD PRESSURE"
*20 "FORGE PRESSURE"
*21 High-Low Pressure Sensor, Last Sequence Pressure
*22 "KA LIMIT MODE" Per Impulse or Average
*23 "(+)CURRENT LIMIT"
*24 "(-)CURRENT LIMIT"
*25 "MOTOR SPEED"
*26 Weld Stepper, KA/Step, Welds Per Step, Total Steps
*27 "WELD PRESSURE STEPPER"
*28 "PROGRAM LOCK, WELD SCHEDULE SELECT LOCK "
*29 "TRANSFORMER POWER RATINGS, CURVES AND SPECS
*30 "Print Weld Data, Print Errors
*31 "Mode Select " 0 Spot w/Retract, 1 Standard Spot, 2 Key-Valve Spot, 3 Cascade,
4 Model 3000A, 5 Model 3000 S1,
*31 "Coil Gain, I.D. Resistor, Water Saver Time
*32 Enable or Disable Individual functions from Squeeze Delay Time to Off Time
*33 Delete Weld Schedule, Delete All Weld Schedules
*34 Change User Password
*35 Allow Open Secondary
*36 IGBT Part Number, Primary Current Limit
*37 "Coil Gain"
*38 "WATER SAVER TIME"
*39 "KA MAX RIPPLE "
*40 "ATD MODE" Disabled, End Of Squeeze, End Of Hold
*41 "INTEGRATOR BOARD" Enabled or Disabled
*42 "Feedback Mode" Open Loop Pri, Open Loop Sec, Open Fast Rise, Closed Loop Pri, Closed Loop Sec

*50 “PLC EOW ON TIME"
*52 "Mode Select" 0 Spot w/Retract, 1 Standard Spot, 2 Key-Valve Spot, 3 Cascade, 4 Model 3000A, 5 Model 3000 S1,
*80 "DEVELOPER MODE, "MANUAL HEAT ADJ, TRANSFORMER SELECT MODE
*87 ”CLOSED LOOP FEEDBACK CHECK. (SECONDARY RESISTANCE ERROR)
*88 “AVERAGE, PEAK”
*89 "Min. Sec. Ohms Test change"
*91 "MAX PSI VALUE “
*96 "Primary Current Scale 0375 I/V, Transformer Resistor, Duty Cycle Limit, 1st Duty Cycle"

*97 "Factory Defined Inputs 01-07”
NONE, ENABLE SQ.DEL., ENABLE SQUEEZE, ENABLE WELD, SKIP WELD, ENABLE TEMPER, SKIP TEMPER, ENABLE OFF, SKIP OFF, TIP DRESS, RETRACTION, CLR ERROR, REMOTE WELD, SCAN IN, KEY LOCK, KEY IN, KEY OUT, HEAD DOWN, FS1A 2nd GROUP, FS1B 3rd GROUP, EXIT WELD, WS SEL BIT-1, WS SEL BIT-2, WS SEL BIT-3, WS SEL BIT-4, WS SEL BIT-5, WS SEL BIT-6, STOP WELD

*98 "Factory Defined Outputs 01-06"
NONE, SQUEEZE-HOLD, SQUEEZE-OFF, OFF TIME, SQ.-SQ., DELAYED START, SCAN OUT, TIP DRESS, CLAMP, MOTOR, WATER SAVER, FORGE, KEY VALVE, RETRACTION, ERROR OUTPUT, VALVE 1, VALVE 2, VALVE 3, VALVE 4, VALVE 5, READY, WELD ON, PLC EOW, CLAMP

*99 "Revision Number M3K”

MODEL 3000 FRONT PANEL

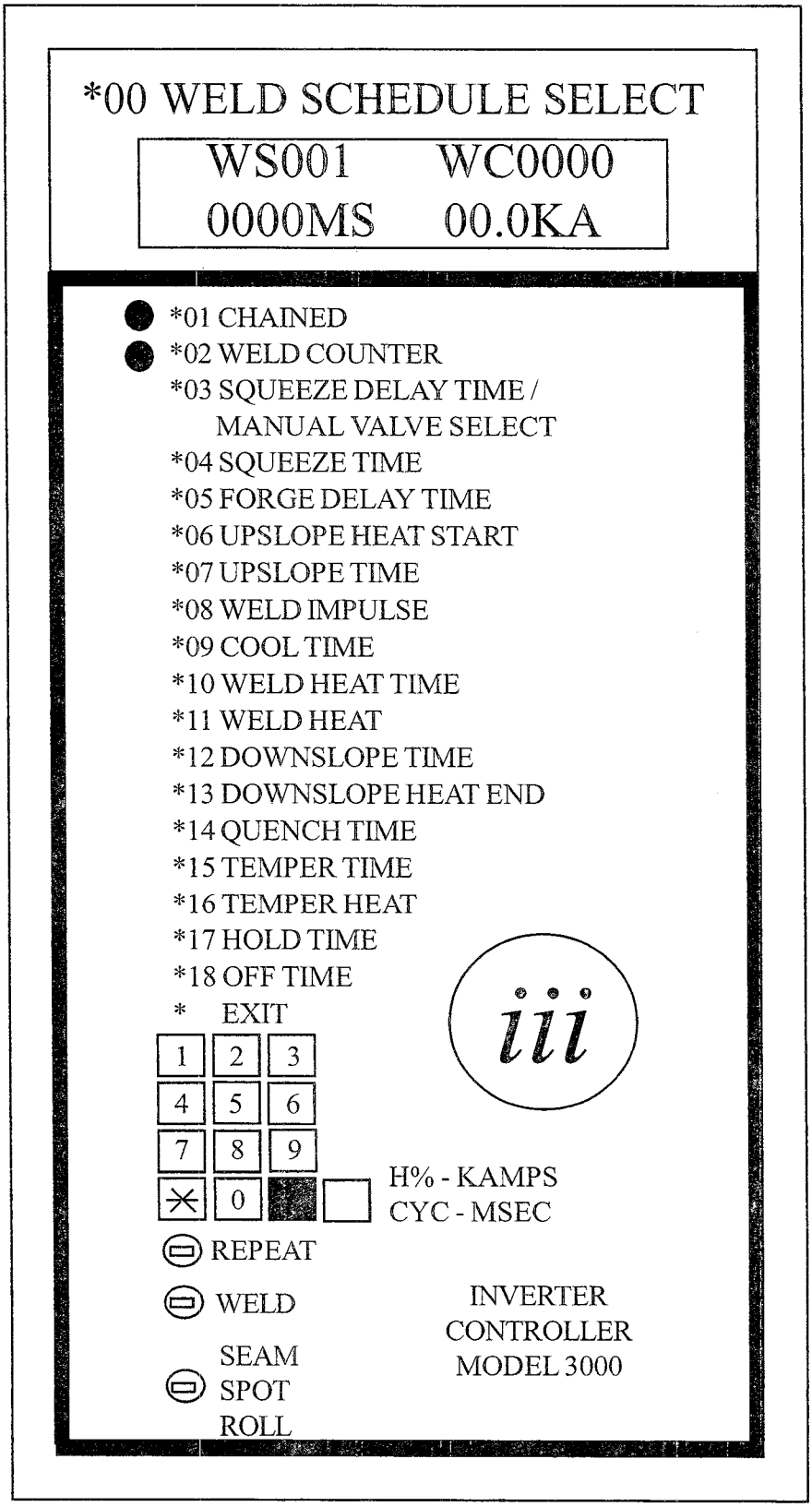

FRONT PANEL SEQUENTIAL WELD FUNCTIONS, DISPLAY WINDOW

STANDBY MODE WINDOW

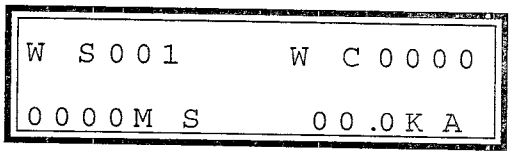

WELD SEQUENCE FUNCTIONS WINDOWS

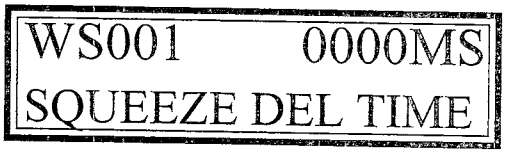

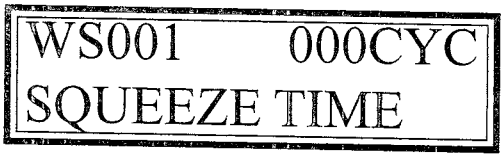

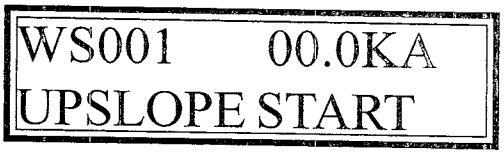

WS001 00000MS COOL TIME	WS001 0000CYC COOL TIME
WS001 0000MS WELD TIME	WS001 000CYC WELD TIME
WS001 00.0KA WELD HEAT KA	WS001 000% WELD HEAT KA
WS001 0000MS DOWNSLOPE TIME	WS001 000CYC DOWNSLOPE TIME
WS001 00.0KA DOWNSLOPE END	WS001 000% DOWNSLOPE END
WS001 0000MS QUENCH TIME	WS001 000CYC QUENCH TIME
WS001 0000MS TEMPER TIME	WS001 000CYC TEMPER TIME
WS001 00.0KA TEMPER HEAT	WS001 000% TEMPER HEAT
WS001 00000MS HOLD TIME	WS001 0000CYC HOLD TIME
WS001 00000MS OFF TIME	WS001 0000CYC OFF TIME

AUXILIARY FUNCTIONS

WS001 00PSI WELD PRESSURE	WS001 000kPa WELD PRESSURE
WS001 00PSI FORGE PRESSURE	WS001 000kPa FORGE PRESSURE
WS001 00PSI HI-LOW DIFF.	WS001 000kPa HI-LOW DIFF.
WS001 PER IMP KA LIMIT MODE	WS001 AVERAGE KA LIMIT MODE
WS001 00.0KA (+)CURRENT LIMIT	
WS001 00.0KA (-)CURRENT LIMIT	
WS001 00% MOTOR SPEED	
WS001 00.0KA/STP WELD STEPPER	WS001 000/STEP WELDS PER STEP
	WS001 0000 TOTAL STEPS
WS001 00PSI/STEP WELD PSI STEPPER	WS001 000kPa/STEP WELD PSI STEPPER

WS001 OFF PROGRAM LOCK

WS001 ON PROGRAM LOCK

ENTER 4 DIGIT PASSWORD

Edited pass code is valid for all weld schedules

WELD TRANSFORMER PARAMETERS
KA – HEAT CYC – DUTY CYCLE

TRANSFORMER PWR RATING XXX KVA

I.D. RESISTOR XXXXXOHMS

TRANSFORMER FREQUENCY XXXXHZ

WSXXX 00.0KA 1% 50MS

WSXXX 00.0KA 1% 100MS

WSXXX 00.0KA 1% 200MS

WSXXX 00.0KA 1% 400MS

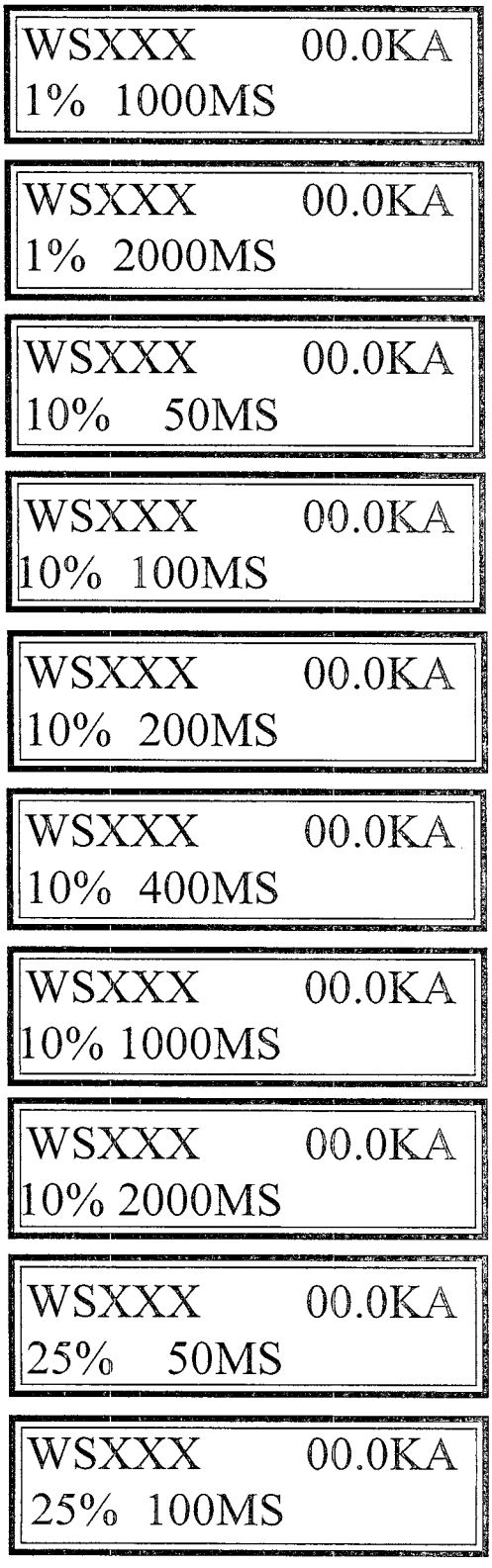
WSXXX 00.0KA
1% 1000MS
WSXXX 00.0KA
1% 2000MS
WSXXX 00.0KA
10% 50MS
WSXXX 00.0KA
10% 100MS
WSXXX 00.0KA
10% 200MS
WSXXX 00.0KA
10% 400MS
WSXXX 00.0KA
10% 1000MS
WSXXX 00.0KA
10% 2000MS
WSXXX 00.0KA
25% 50MS
WSXXX 00.0KA
25% 100MS

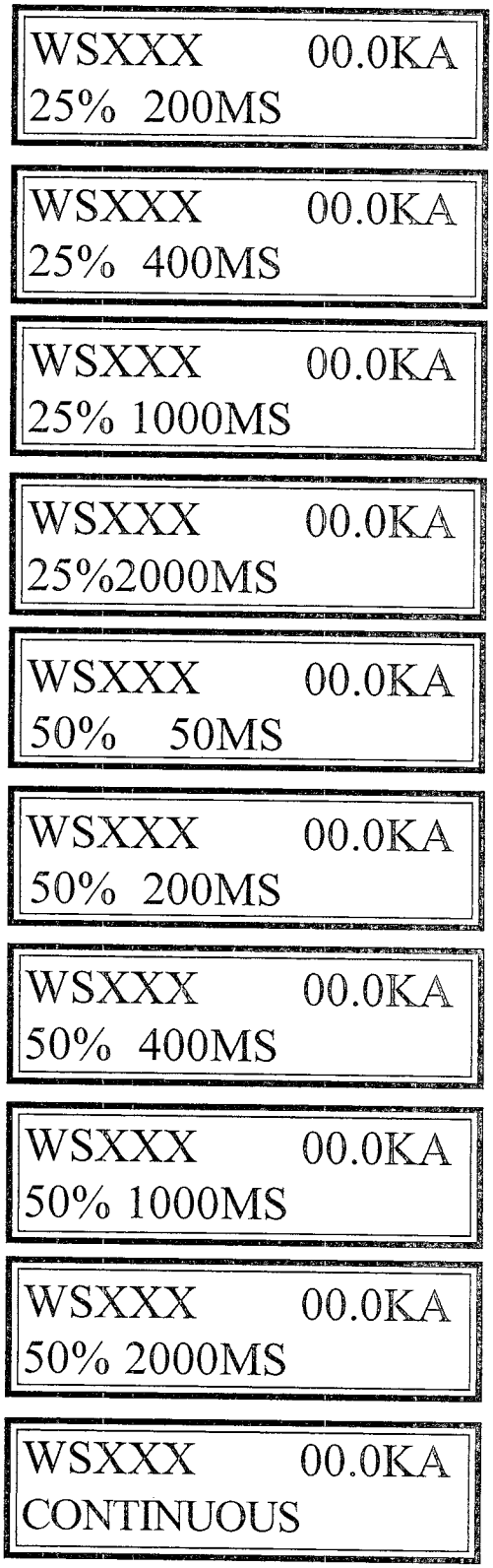
WSXXX 00.0KA
25% 200MS
WSXXX 00.0KA
25% 400MS
WSXXX 00.0KA
25% 1000MS
WSXXX 00.0KA
25%2000MS
WSXXX 00.0KA
50% 50MS
WSXXX 00.0KA
50% 200MS
WSXXX 00.0KA
50% 400MS
WSXXX 00.0KA
50% 1000MS
WSXXX 00.0KA
50% 2000MS
WSXXX 00.0KA
CONTINUOUS

All the above transformer operating parameter limits are identified by a resistor code located inside the welding transformer. If the operator enters weld schedule parameters, which exceed the above limits, the weld controller will halt and the front panel display will display "Too much heat".
The weld controller will automatically calculate the necessary duty cycle based on the HEAT TIME and KA programmed. Then, it will insert the minimum required time in:
1. "OFF TIME" when in Spot mode.
2. "HOLD TIME" when in Roll Spot mode.
3. "COOL TIME" when in Seam mode.

If the end user changes these values to lower numbers, the controller will not allow it and the front panel screen will display "Too much heat"

PSTS Fault Display

Air pressure switches, temperature switches, and water flow switches are connected in series and they all are closed in normal operation. The model 3000 controller monitors that condition only when the welding control is initiated with the weld switch on. If any of the switch inputs are open, the controller will halt and display a PSTS error on the controller screen. Push the * key to exit to standby mode.

Release Retraction Display

If the welding machine and controller are powered up with the retraction switch closed, the model 3000 will not initiate any functions and display the message "Release Retraction".

Secondary Resistance Error Display

The controller checks the secondary current flow through the welding tips when current is applied. If no current flow, or instaneous current drops during a weld, the controller will stop with the error message on the screen.

BASIC FEATURES FOR THE PLC DRIVEN INTERFACE

1. Ready output to PLC in the stand by mode
2. Halt error signal to PLC
3. Weld on signal to PLC
4. Heat Time - KA - Halt Error data via serial port to PLC
5. Installation drawing number 155-036-02-63H

READY OUTPUT SIGNAL TO PLC

The weld controller is providing a relay switch closure to the PLC in the ready mode. The READY signal to the PLC will be on only when the controller is in the stand by mode: ready to receive from the PLC the FS1 and FS2 switch closure to start the weld.

HALT ERROR SIGNAL TO PLC

The weld controller is providing a relay switch closure to the PLC in the HALT ERROR mode. The HALT ERROR signal to the PLC will be on with a display message on the controller screen. The controller shall return to stand by mode, when the * key on the controller is depressed, or "HALT" reset input switch from the PLC.

WELD ON SIGNAL TO PLC

The weld controller is providing a relay switch closure to the PLC when it starts the welding sequence. The WELD ON signal to the PLC will turn off when the controller returns to stand by mode.

PLC PRINTER PORT / LAPTOP computer input serial port

The controller serial port shall send to the PLC random testing values of Heat Time and KA current, during welding. That data may be stored also on a PC laptop computer hard drive memory. The weld data sent every xxx welds shall be set at the controller via *30. A min. xxx value shall be preset at the controller. If the computer halts due to a fault, which is also displayed on the front panel, that data shall also be sent via the serial port to the PLC.

Printer port setup: 9800 baud, 8 data bits, 1 stop bit, no parity.

The DB9 connector J4 located on the peripheral board is connected via a ribbon cable to a DB9 connector located at the back side of the controller cabinet.

END OF WELD INTERFACE SIGNAL TO PLC

For custom application where a welding machine indexes part position after the end of weld, and the electrodes in the retracted position, a relay is energized at the end of OFF TIME, for the duration required and specified to the weld machine manufactor. That time if factory preset in the weld controller.
A single pole relay contacts are available at the welding controller terminal strip labled TX2. See installation drawing no. 13A

PC M3K Weld Schedule Control software

Overview

This software is used to connect a Personal Computer (PC) to the M3K for managing Weld Schedules.

The Red "WELD CONTROLLER" portion of the program is where the Weld Schedules on the M3K are controlled.

The Blue "THIS COMPUTER" portion of the program is where the Weld Schedules on the PC are controlled.

Setup

When the CD is inserted into the PC, the install program will begin to run. If the install program does not run, you must manually run the setup.exe program in the install directory of the CD.

After setup has completed, then connect a serial cable from the PC to the Port labeled "PC" on the M3K.

Operation

Establish communication between the PC and the M3K

Once the Communications Port has been selected click on the "Connect to M3K" button to establish the connection between the PC and the M3K.

After communication is established, the weld schedules that are on the M3K will be listed on the "WELD CONTROLLER" portion of the program.

Location where the Weld Schedules on the PC are to be stored

Select the location where the Weld Schedules on the PC are to be stored. The weld schedules that are on the PC will be listed on the "THIS COMPUTER" portion of the program.

To copy Weld Schedules from the M3K to the PC

Select the Weld Schedules on the M3K that you would like to copy to the PC.
Select the location where the Weld Schedules are to be stored on the PC.
Click on the "Copy to PC" button to copy the Weld Schedules from the M3K to the PC.

To copy Weld Schedules from the PC to the M3K

Select the location where the Weld Schedules are stored on the PC.
Select the Weld Schedules on the PC that you would like to copy to the M3K.
Click on the "Copy to M3K" button to copy the Weld Schedules from the PC to the M3K.

To print the Weld Schedules on the PC

Select the location where the Weld Schedules are stored on the PC.
Select the Weld Schedules on the PC that you would like to print.
Click on the "Print" button to print the Weld Schedules from the PC to the default printer.

To Add or Change the description for Weld Schedules on the PC

Select the location where the Weld Schedules are stored on the PC.
Select the Weld Schedules on the PC that you would like to add or change the description of.
Click on the "Change Description" button to open a window that will allow you to change the description for each selected Weld Schedule on the PC.

PC Port configuration

BAUD: 38400
DATA BITS: 8
PARITY: None
STOP BITS: 1
FLOW CONTROL: None

This information is subject to change without notice.

Diagnostic messages are sent TO and FROM the M3K through the PC Port.
The details for these messages are not defined here and should be ignored by any application that does not specifically need them.

The following examples show how to Get and Save Weld schedules with the M3K:

Example of Get list of programmed weld schedules from M3K to PC.

PC	M3K	Description
.w1		Command to Get list of programmed weld schedules from M3K.
[0x0D]		Start getting list
	[0x02]	Start of list of programmed weld schedules
	000[0x0D][0x0A]	1st programmed weld schedule is always 000
	001[0x0D][0x0A]	Next programmed weld schedule in this example is 001
	234[0x0D][0x0A]	Last programmed weld schedule in this example is 234
	[0x03]	End of list of programmed weld schedules

Example of Get programmed weld schedule 001 from M3K to PC.

PC	M3K	Description
.w2		Command to Get specific weld schedule from M3K.
001		Number of weld schedule to get (001) in this example
[0x0D]		Start getting weld schedule
	[0x02]	Start of programmed weld schedule data
	*	Start of 1st record
	01	Star number of this weld data parameter
	(	Delimiter for start of M3K internal representation of this weld data parameter
	001,	Internal offset (NEVER CHANGE THIS VALUE!!!)
	000,	Internal offset (NEVER CHANGE THIS VALUE!!!)
	16384	Internal representation of the data for this weld schedule data parameter (ONLY CHANGE THIS VALUE, IF YOU ARE SURE OF WHAT YOU ARE DOING!!!)
	)	Delimiter for end of M3K internal representation of this weld data parameter
	:	Delimiter for start of ASCII description of data parameter and human readable value
	WS023 Disabled Chained	ASCII description of data parameter and human readable value (format varies)
	[0x0D][0x0A]	End of 1st record
		Repeats until all records are sent
	*	Start of last record
	(variable length data)	Data for last record
	[0x0D][0x0A]	End of last record
	[0x03]	End of programmed weld schedule data

Example of Send weld schedule 001 from PC to M3K.

PC	M3K	Description
.w3		Command to Send specific weld schedules to M3K.
001		Number of weld schedule to send (001) in this example
#[0x0D]		Start receiving weld schedule
	OK[0x0D][0x0A]	ACK from M3K
*		Start of 1st record
(variable length data)		Data for 1st record (Same data as received from .w2 command)
[0x0D][0x0A]		End of 1st record
	OK[0x0D][0x0A]	ACK from M3K
		Repeats until all records are sent
*		Start of last record
(variable length data)		Data for last record
[0x0D][0x0A]		End of last record
[0x03]		
	OK[0x0D][0x0A]	ACK from M3K
.w3		Command to Save specific weld schedule in M3K.
001		Number of weld schedule to save (001) in this example
#[0x0D]		Save weld schedule
	OK[0x0D][0x0A]	ACK from M3K

If the ACK is not received within 5 seconds of the command being sent, check to see if an ASCII error message was sent, if none, then, resend the original command
If an error was received, analyze the error message, correct the error and resend the command.

All weld schedule numbers are always sent as three digit numbers padded with leading zeros.

Model 3000 weld controller installation instruction.

1. Verify that the 3 phase input power is within +/- 20% of the specified voltage rating marked on the controller power distribution transformer connected at the left hand lower side in the controller cabinet. The transformer is a 50HZ/60HZ isolation transformer, single phase with taps at: 220VAC-240VAC-380VAC-440VAC-480VAC-575VAC.
2. Prior to connecting the 3 phase input power line to the controller breaker input, connect the power distribution transformer mentioned above, to the appropriate tap switch.
3. For the welding transformer installation use drawing 155-036-01-61 sheet 1of 1.
4. For a Spot welding machine,(sciaky type) use installation drawing 155-036-01-62 sheet 1of 2.
5. For a Seam and Roll Spot welding machine,(sciaky type) use installation drawing 155-036-01-62 sheet 2of 2.
6. For Spot - Seam - Roll Spot standard welding machine, use installation drawing 155-036-01-66 sheet 1 of 1.
7. Connect welding transformer primary two wire cables from the welding transformer to the controller terminals labeled H1 and H2.
8. Connect welding transformer ground terminal with a size 4 green cable to the electrical input power ground. This is a safety requirement. If a short may occur in the welding transformer between the primary and secondary winding, the earth ground cable must be heavy enough to blow the input breaker.
9. When connecting the welding transformer to the welding machine, the (-) side of the welding transformer must be case ground.
10. Connect 6 pin connector J3 that reads secondary current, welding transformer ID code, and the welding transformer thermal switch.
11. 120VAC is supplied from the controller peripheral board, via connector TB4 to power all air valves with exception of the FORGE valve. TB4 pins 13 and 14 supply 24VDC 0.25 amps to the forge valve.
12. Connect a normally open pressure switch to TB1 pins 1 and 2. With air pressure set at 120PSI, the switch shall be closed.
13. Connect a normally closed momentary EMERGENCY STOP switch to TB3 pins 1 and 2. Upon switch closure, the controller shall stop welding, and the squeeze valve turns off. Remove jumper factory installed to TB3 pins 1 and 2.
14. The Retraction switch shall be a normally open switch mechanically locked in both positions, ON and OFF.
15. The First and Second stage switches FS1 & FS2 are normally open, momentary switches.

16. An external anti Tie Down enable switch, converts FS1 & FS2 to ATD switches.
17. A normally open TIP DRESS switch turns on Forge valve in Spot mode, and also the motor and clutch / brake in Seam or Roll Spot mode.
18. REMOTE WELD SWITCH. This switch is operating in conjunction with weld switch located on the front panel. When not used, connect a jumper wire between TB3-14 and TB3-15 on the peripheral board.

SCHEMATICS

MODEL 3000 BASIC INSTALLATION DIAGRAM
151-014-02..... 1

SPOT WELDER 1 CYLINDER STANDARD WELDER WIRING DIAGRAM
155-036-02-63B.....2

SPOT WELDER 1 CYLINDER STANDARD WELDER WIRING DIAGRAM
WELD DONE AND WELD ERROR RELAY OUTPUTS
155-036-02-63C.....3

SINGLE IGBT DRIVE ASSEMBLY PANEL INTERFACE WIRING DIAGRAM
151-014-04..... 4

POWER DRIVER WIRING DIAGRAM 400 AMP IGBT'S
155-036-01-64.....5

POWER DRIVER WIRING DIAGRAM 800 AMP IGBT'S
155-036-01-67..... 6

POWER DRIVER WIRING DIAGRAM 900 AMP IGBT'S
155-036-01-71.....7

POWER DRIVER WIRING DIAGRAM 1200 AMP IGBT'S
155-036-02-61.....8

POWER DRIVER WIRING DIAGRAM 1600 AMP IGBT'S
155-036-03-61.....9

SPOT - SEAM - ROLL SPOT WITH RETRACTION
PRESSURE RERGULATOR INTERCONNECT DIAGRAM
155-036-01-66.....10

SPOT - SEAM - ROLL SPOT WITH RETRACTION MODEL 3000 FOR SCIAKY
TYPE WELDER. PRESSURE REGULATOR INTERCONNECT DIAGRAM
155-036-02-63.....11

KEY VALVE SYSTEM WITH RETRACTION HEAD MODEL 3000 FOR SCIAKY
TYPE WELDER RS232 INTERFACE. PRESSURE REGULATOR INTERCONNECT
DIAGRAM
155-036-01-32.....12

SPOT - MANUAL VALVE SELECT 1 OF 5 VALVES. PRESSURE REGULATOR
DIAGRAM
155-036-01-68.....13

PLC INTERFACE AND WELD VALVE OUTPUT AND END IF WELD OUTPUT
DIAGRAM
155-036-02-63I.....13A

PLC INTERFACE AND WELD VALVE OUTPUT AND TIP DRESS VALVE OUTPUT
155-036-02-63J.....13B

FS1 AND FS2 ARE OPTO-TOUCH SWITCHES, MOTOR ON/OFF RELAY OUTPUT, AIR PRESSURE REGULATOR DIAGRAM
155-036-02-63K.....13C

DUAL IGBT DRIVE ASSEMBLY PANEL INTERFACE WIRING DIAGRAM
151-014-03.....14

DUAL TRANSFORMER CONNECTION
155-036-01-65.....15,16

ASSEMBLY WIRING DIAGRAM REGENRATIVE DRIVE PERMANENT MAGNET MOTOR
146-010-04.....17

ASSEMBLY WIRING DIAGRAM REGENRATIVE DRIVE ARMATURE AND FIELD DC MOTORS 0-180VDC
146-010-03..... 18

ASSEMBLY WIRING DIAGRAM REGENRATIVE DRIVE ARMATURE AND FIELD DC MOTORS 0-90VDC
146-010-03B..... 19

ASSEMBLY WIRING DIAGRAM REGENRATIVE DRIVE FOR CUSTOM SCIAKY SEAM WELDER WITH KEY LOCK
146-010-04.....20

KEY VALVE SYSTEM WITH RETRACTION HEAD
RS232 INTERFACE, SPOT-SEAM-ROLLSPOT
PRESSURE REGULATOR INTERCONNECT DIAGRAM
155-036-01-A32.....21

SPOT WELDER PLC INTERFACE
WELDER WIRING DIAGRAM
155-036-02-63H.....22

FS1 AND FS2 ARE OPTO-TOUCH SWITCHES, AIR PRESSURE SENSOR
155-036-02-63L.....22A

WELDER WIRING DIAGRAM WITH THE TDC 5676 TRANSFORMER
155-036-02-71C.....23

WELD CONTROLLER WITH DUAL BLOCK IGBT
155-38-04.....24

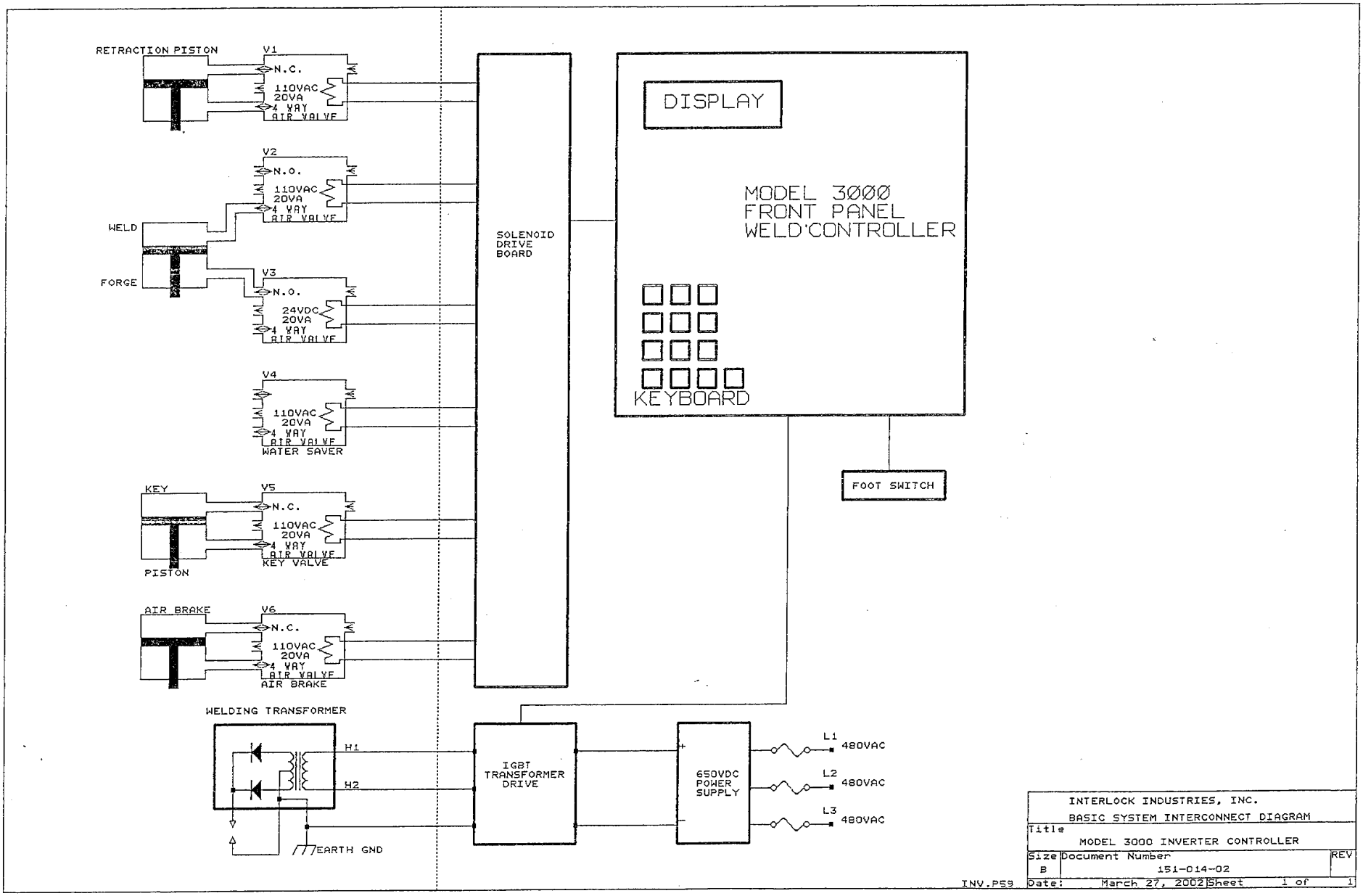

INV.PSS

INTERLOCK INDUSTRIES, INC.		
BASIC SYSTEM INTERCONNECT DIAGRAM		
Title: MODEL 3000 INVERTER CONTROLLER		
Size: B	Document Number: 151-014-02	REV
Date: March 27, 2002	Sheet 1 of 1	

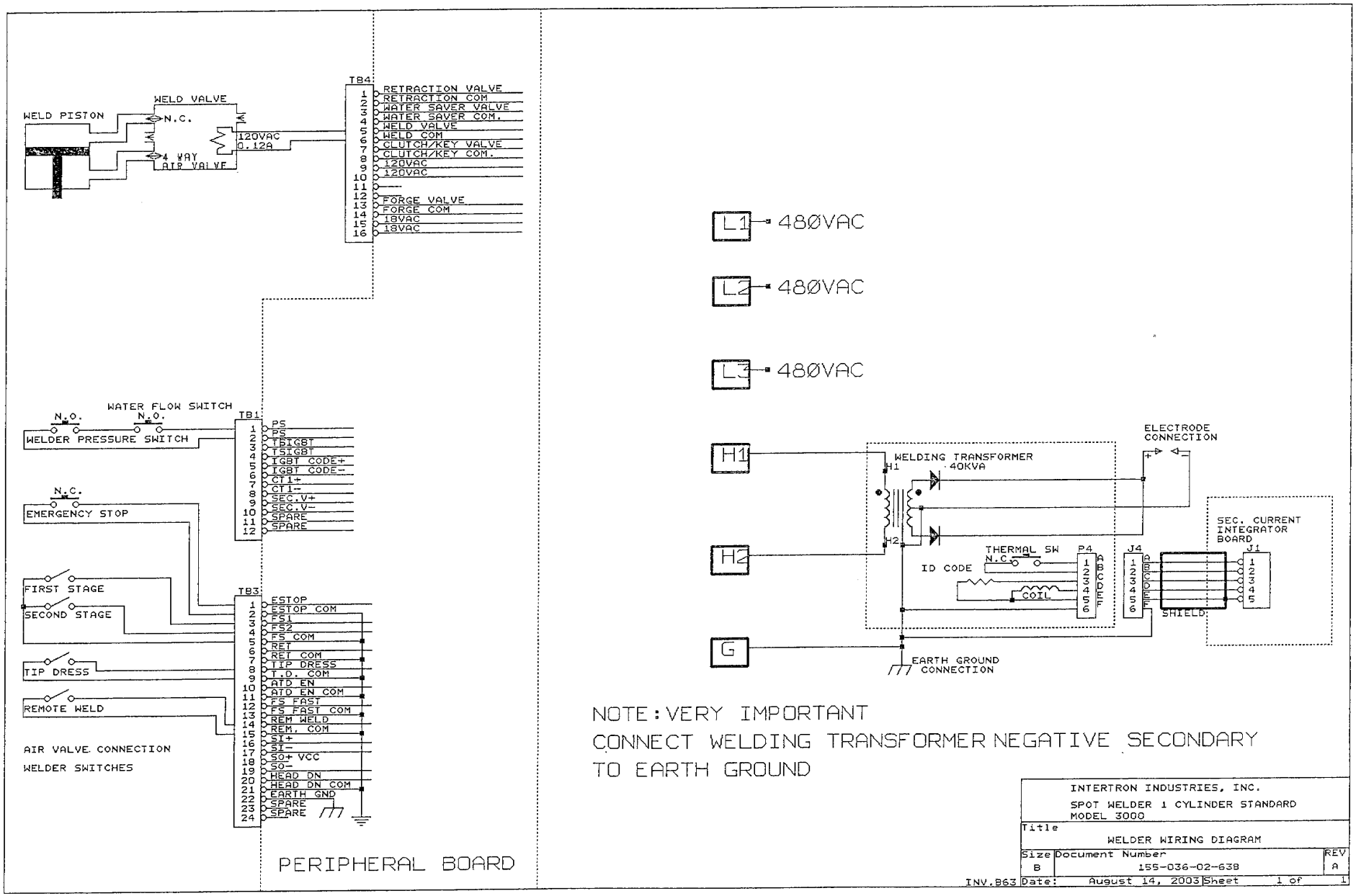
TB4
WELD VALVE
WELD PISTON
N.C.
120VAC
0.12A
4 WAY
AIR VALVE
1 RETRACTION VALVE
2 RETRACTION COM
3 WATER SAVER VALVE
4 WATER SAVER COM.
5 WELD VALVE
6 WELD COM
7 CLUTCH/KEY VALVE
8 CLUTCH/KEY COM.
9 120VAC
10 120VAC
11
12 FORGE VALVE
13 FORGE COM
14 18VAC
15 18VAC
16
WATER FLOW SWITCH
N.O.
N.O.
WELDER PRESSURE SWITCH
TB1
1 PS
2 PS
3 TBIGBT
4 TSIGBT
5 IGBT CODE+
6 IGBT CODE-
7 CT1+
8 CT1-
9 SEC. V+
10 SEC. V-
11 SPARE
12 SPARE
N.C.
EMERGENCY STOP
FIRST STAGE
SECOND STAGE
TIP DRESS
REMOTE WELD
TB3
1 ESTOP
2 ESTOP COM
3 FS1
4 FS2
5 FS COM
6 RET
7 RET COM
8 TIP DRESS
9 T.D. COM
10 ATD EN
11 ATD EN COM
12 FS FAST
13 FS FAST COM
14 REM WELD
15 REM. COM
16 SI+
17 SI-
18 SO+ VCC
19 SO-
20 HEAD DN
21 HEAD DN COM
22 EARTH GND
23 SPARE
24 SPARE
AIR VALVE CONNECTION
WELDER SWITCHES
PERIPHERAL BOARD
L1 480VAC
L2 480VAC
L3 480VAC
H1
H2
G
WELDING TRANSFORMER
40KVA
H1
H2
ELECTRODE
CONNECTION
+
-
THERMAL SW
N.C.
ID CODE
COIL
P4
J4
J1
SHIELD
SEC. CURRENT
INTEGRATOR
BOARD
EARTH GROUND
CONNECTION
NOTE: VERY IMPORTANT
CONNECT WELDING TRANSFORMER NEGATIVE SECONDARY
TO EARTH GROUND
INTERTRON INDUSTRIES, INC.
SPOT WELDER 1 CYLINDER STANDARD
MODEL 3000
Title
WELDER WIRING DIAGRAM
Size B
Document Number
155-036-02-638
REV A
INV.863
Date: August 14, 2003
Sheet 1 of 1

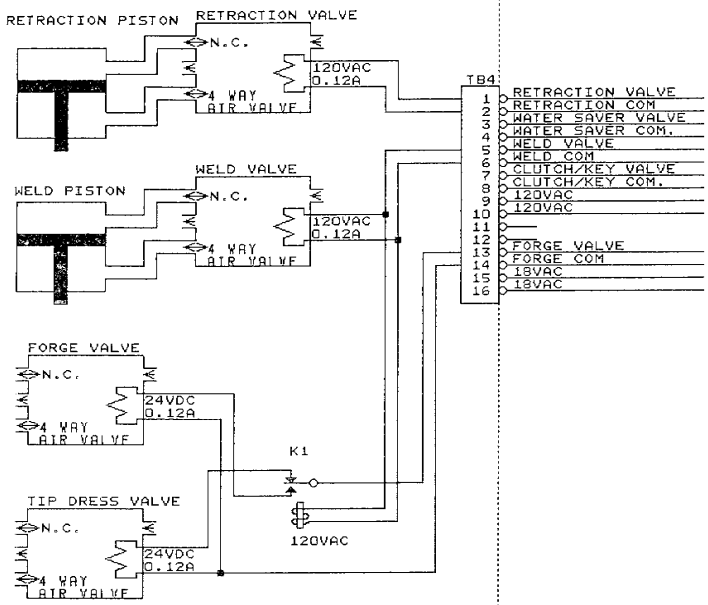

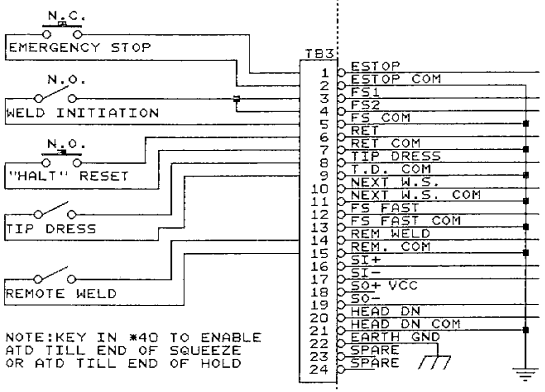

NOTE:KEY IN *40 TO ENABLE ATD TILL END OF SQUEEZE OR ATD TILL END OF HOLD

AIR VALVE CONNECTION

WELDER SWITCHES

PERIPHERAL BOARD

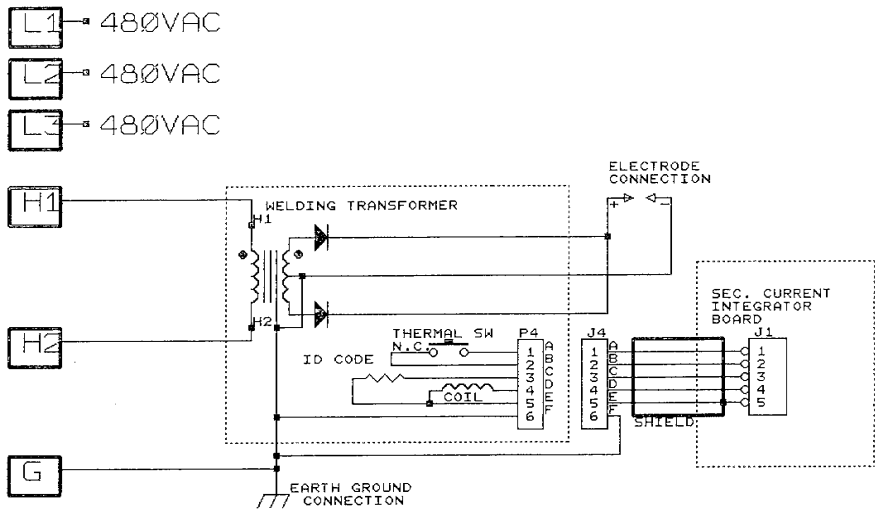

NOTE: VERY IMPORTANT
CONNECT WELDING TRANSFORMER NEGATIVE SECONDARY TO EARTH GROUND

INTERTRON INDUSTRIES, INC.

SPOT WELDER 1 CYLINDER STANDARD
MODEL 3000
WELD DONE AND WELD ERROR RELAY OUTPUTS

Title: WELDER WIRING DIAGRAM

Size	Document Number	REV
B	155-036-02-63C	A

INV.G63 Date: July 22, 2005 Sheet 1 of 1

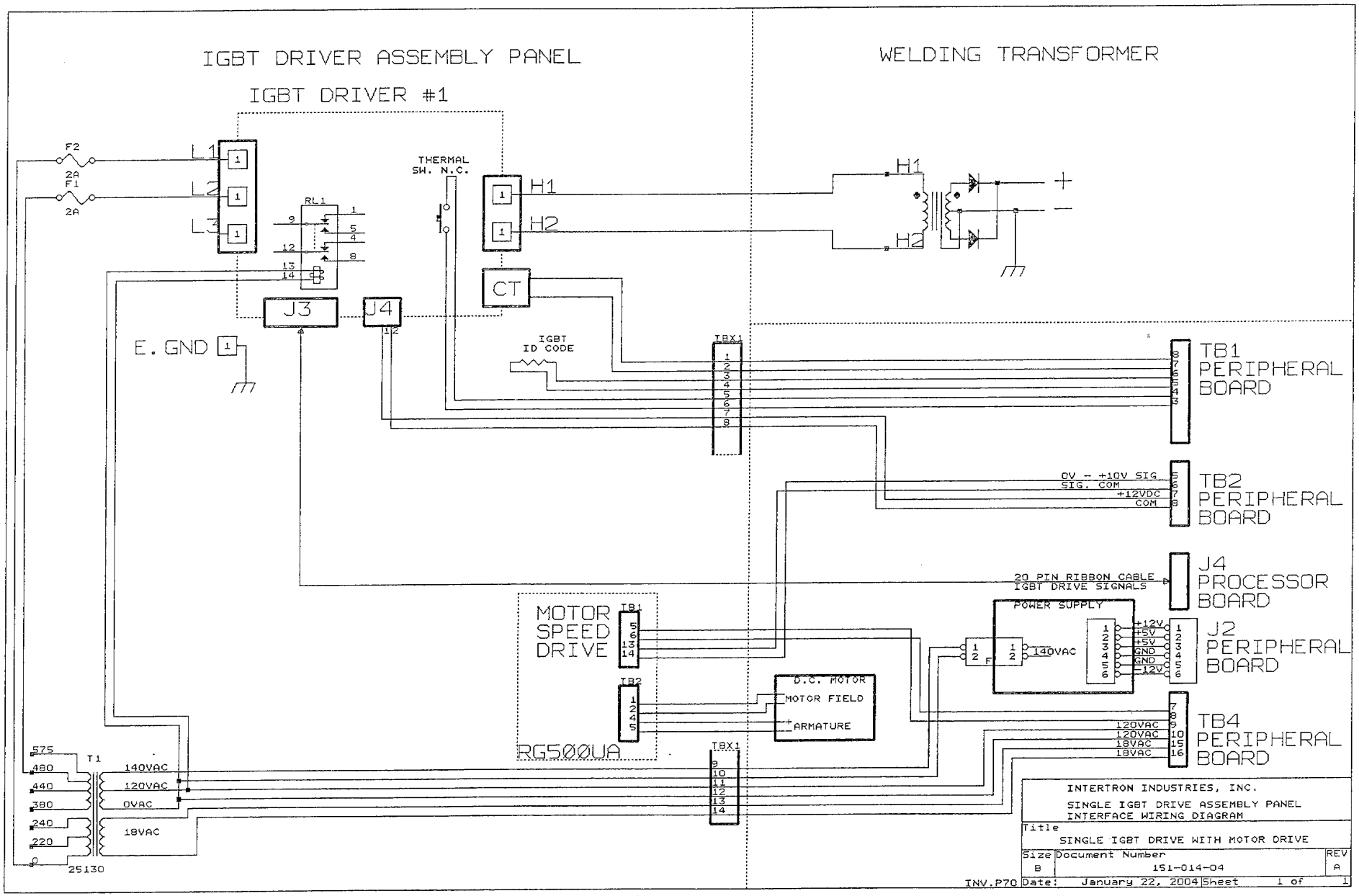
IGBT DRIVER ASSEMBLY PANEL
IGBT DRIVER #1
WELDING TRANSFORMER
F2
2A
F1
2A
L1
L2
L3
RL1
THERMAL
SW. N.C.
H1
H2
CT
J3
J4
E. GND
IGBT
ID CODE
TBX1
H1
H2
TB1
PERIPHERAL
BOARD
0V - +10V SIG
SIG. COM
+12VDC
COM
TB2
PERIPHERAL
BOARD
20 PIN RIBBON CABLE
IGBT DRIVE SIGNALS
J4
PROCESSOR
BOARD
POWER SUPPLY
140VAC
+12V
+5V
+5V
GND
GND
-12V
J2
PERIPHERAL
BOARD
MOTOR
SPEED
DRIVE
TB1
TB2
RG500UA
D.C. MOTOR
MOTOR FIELD
ARMATURE
TBX1
120VAC
120VAC
18VAC
18VAC
TB4
PERIPHERAL
BOARD
575
480
440
380
240
220
0
T1
140VAC
120VAC
0VAC
18VAC
25130
INTERTRON INDUSTRIES, INC.
SINGLE IGBT DRIVE ASSEMBLY PANEL
INTERFACE WIRING DIAGRAM
Title
SINGLE IGBT DRIVE WITH MOTOR DRIVE
Size
B
Document Number
151-014-04
REV
A
INV.P70
Date: January 22, 2004
Sheet 1 of 1

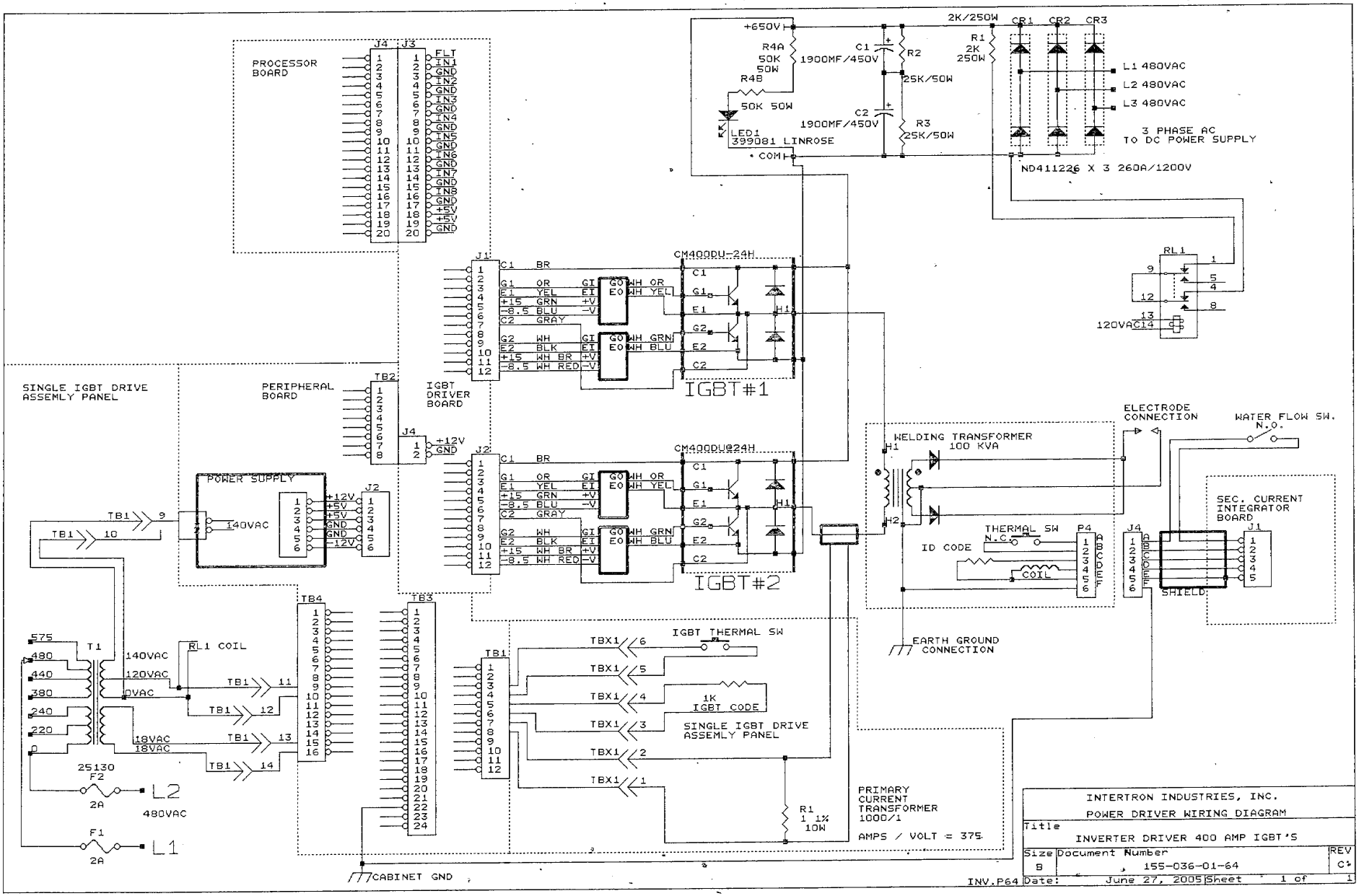
PROCESSOR BOARD
J4
J3
FLT
IN1
IN2
IN3
IN4
IN5
IN6
IN7
IN8
+5V
GND
+650V
R4A 50K 50W
R4B 50K 50W
LED1 399081 LINROSE
COM
C1 1900MF/450V
C2 1900MF/450V
R2 25K/50W
R3 25K/50W
2K/250W
R1 2K 250W
CR1
CR2
CR3
L1 480VAC
L2 480VAC
L3 480VAC
3 PHASE AC TO DC POWER SUPPLY
ND411226 X 3 260A/1200V
RL1
120VAC
J1
CM400DU-24H
IGBT#1
IGBT#2
IGBT DRIVER BOARD
SINGLE IGBT DRIVE ASSEMLY PANEL
PERIPHERAL BOARD
TB2
J4
+12V
GND
J2
POWER SUPPLY
140VAC
TB1
WELDING TRANSFORMER 100 KVA
ELECTRODE CONNECTION
WATER FLOW SW. N.O.
THERMAL SW N.C.
P4
ID CODE
COIL
SEC. CURRENT INTEGRATOR BOARD
SHIELD
EARTH GROUND CONNECTION
TB4
TB3
T1
575
480
440
380
240
220
0
140VAC
120VAC
0VAC
18VAC
18VAC
RL1 COIL
25130
F2
2A
L2
480VAC
F1
2A
L1
IGBT THERMAL SW
TBX1
1K IGBT CODE
SINGLE IGBT DRIVE ASSEMLY PANEL
R1 1 1% 10W
PRIMARY CURRENT TRANSFORMER 1000/1
AMPS / VOLT = 375
CABINET GND
INTERTRON INDUSTRIES, INC.
POWER DRIVER WIRING DIAGRAM
Title
INVERTER DRIVER 400 AMP IGBT'S
Size B
Document Number 155-036-01-64
REV C
Date: June 27, 2005
Sheet 1 of 1
INV.P64

C

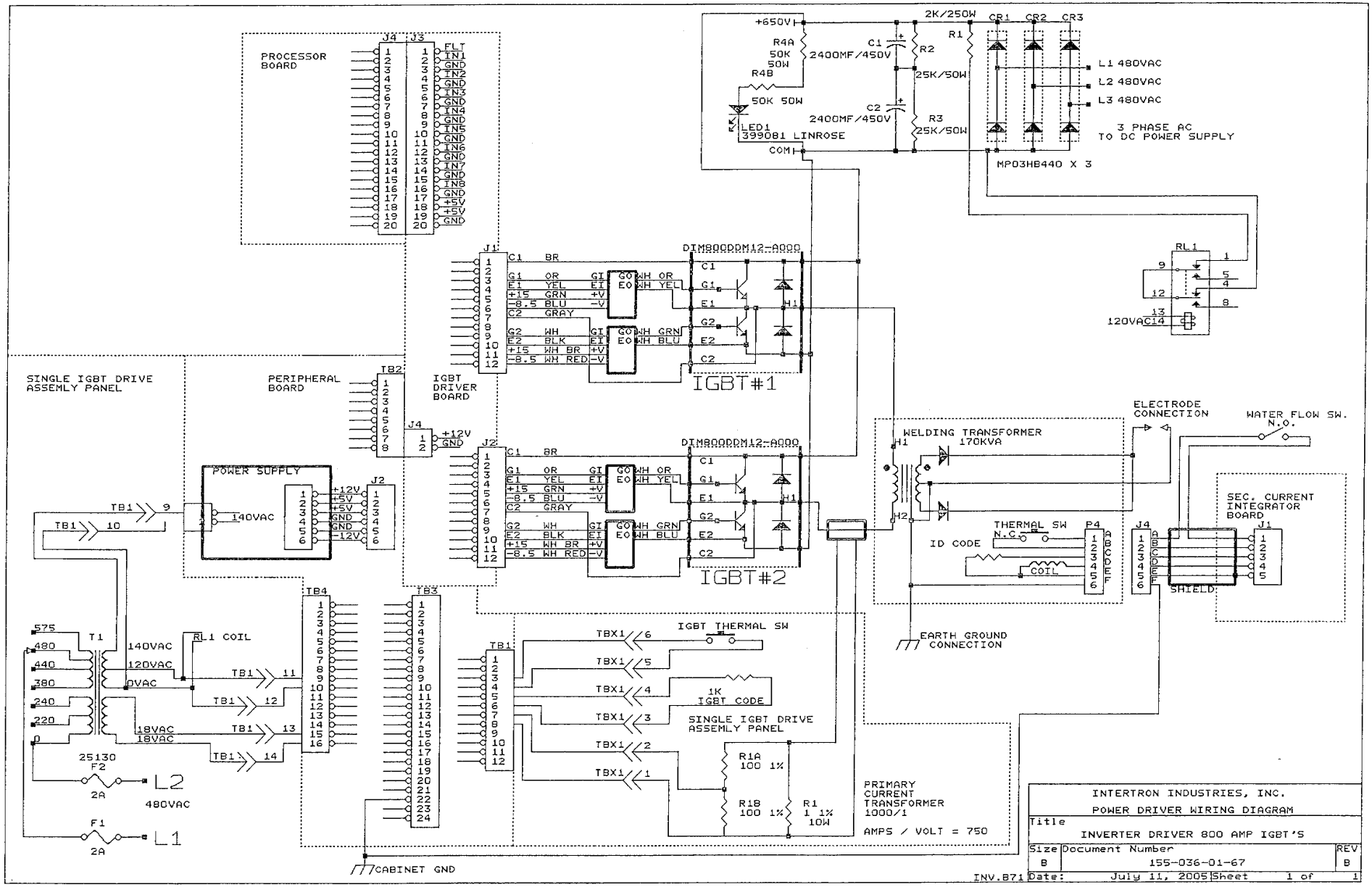
PROCESSOR BOARD
J4 J3
FLT
IN1
IN2
IN3
IN4
IN5
IN6
IN7
IN8
+5V
GND
+650V
R4A 50K 50W
R4B 50K 50W
LED1 399081 LINROSE
C1 2400MF/450V
C2 2400MF/450V
2K/250W
R1
R2 25K/50W
R3 25K/50W
CR1 CR2 CR3
L1 480VAC
L2 480VAC
L3 480VAC
3 PHASE AC TO DC POWER SUPPLY
COM
MP03HB440 X 3
RL1
120VAC
J1
DIM800DDM12-A000
IGBT#1
IGBT#2
IGBT DRIVER BOARD
PERIPHERAL BOARD
TB2
J4 +12V GND
J2
SINGLE IGBT DRIVE ASSEMLY PANEL
POWER SUPPLY
140VAC
+12V
+5V
GND
-12V
TB1 9
TB1 10
ELECTRODE CONNECTION
WATER FLOW SW. N.O.
WELDING TRANSFORMER 170KVA
H1
H2
THERMAL SW N.C.
ID CODE
COIL
P4
SHIELD
SEC. CURRENT INTEGRATOR BOARD
J1
EARTH GROUND CONNECTION
TB4
TB3
T1
575
480
440
380
240
220
0
140VAC
120VAC
0VAC
18VAC
18VAC
25130
F2
2A
L2
480VAC
F1
2A
L1
RL1 COIL
TB1 11
TB1 12
TB1 13
TB1 14
IGBT THERMAL SW
TBX1 6
TBX1 5
TBX1 4
TBX1 3
TBX1 2
TBX1 1
1K IGBT CODE
SINGLE IGBT DRIVE ASSEMLY PANEL
R1A 100 1%
R1B 100 1%
R1 1 1% 10W
PRIMARY CURRENT TRANSFORMER 1000/1
AMPS / VOLT = 750
CABINET GND
INTERTRON INDUSTRIES, INC.
POWER DRIVER WIRING DIAGRAM
Title
INVERTER DRIVER 800 AMP IGBT'S
Size B
Document Number 155-036-01-67
REV B
INV.871
Date: July 11, 2005
Sheet 1 of 1

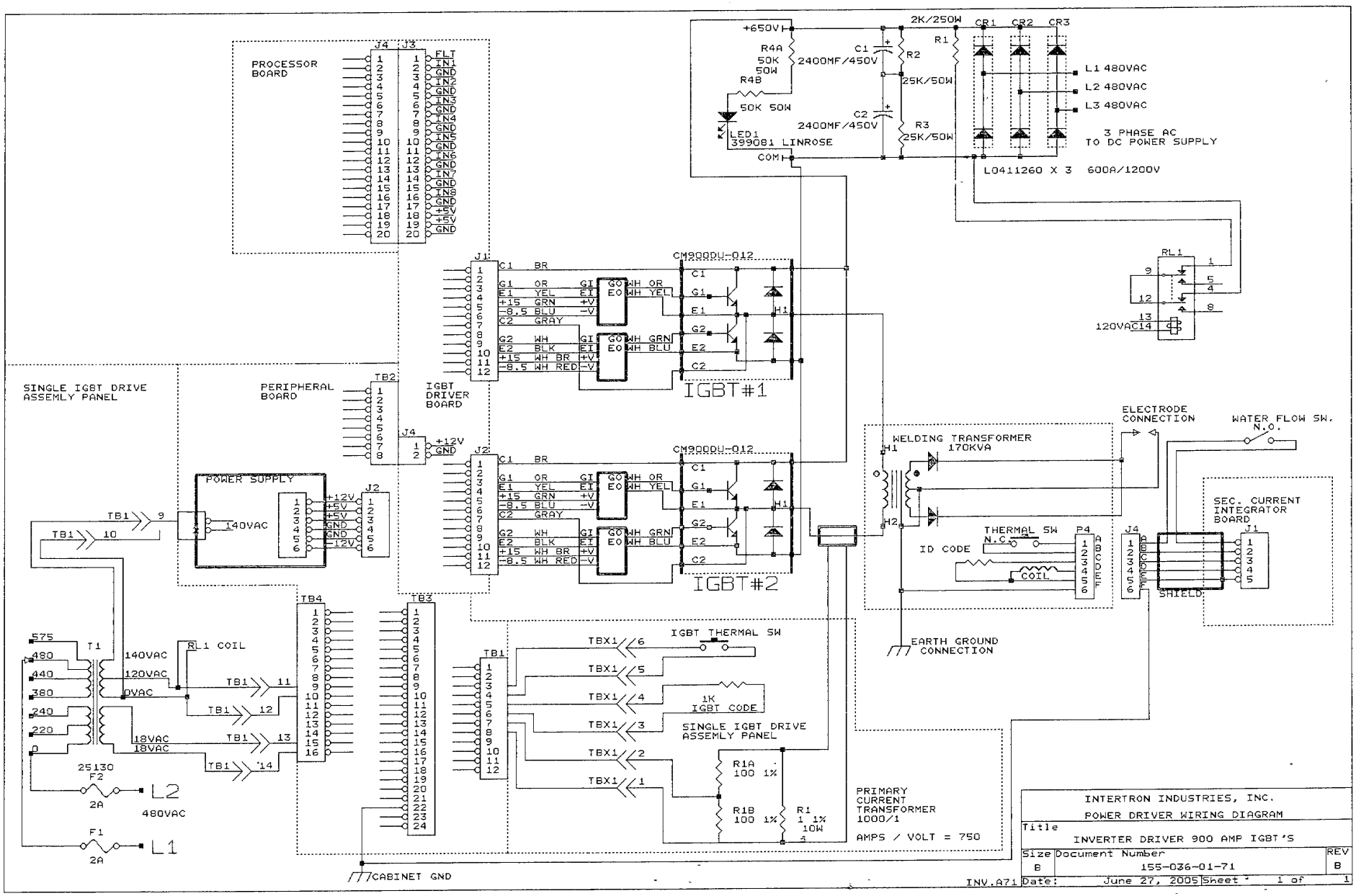
PROCESSOR BOARD
J4
J3
FLT
IN1
GND
IN2
IN3
IN4
IN5
IN6
IN7
IN8
+5V
+650V
R4A 50K 50W
R4B 50K 50W
LED1 399081 LINROSE
COM
C1 2400MF/450V
C2 2400MF/450V
R2 25K/50W
R3 25K/50W
R1 2K/250W
CR1
CR2
CR3
L1 480VAC
L2 480VAC
L3 480VAC
3 PHASE AC TO DC POWER SUPPLY
L0411260 X 3 600A/1200V
RL1
120VAC
J1
CM900DU-012
IGBT#1
IGBT#2
IGBT DRIVER BOARD
SINGLE IGBT DRIVE ASSEMLY PANEL
PERIPHERAL BOARD
TB2
J4
+12V
GND
POWER SUPPLY
140VAC
J2
TB1
WELDING TRANSFORMER 170KVA
ELECTRODE CONNECTION
WATER FLOW SW. N.O.
SEC. CURRENT INTEGRATOR BOARD
THERMAL SW N.C.
ID CODE
COIL
P4
SHIELD
EARTH GROUND CONNECTION
TB4
TB3
T1
575
480
440
380
240
220
0
140VAC
120VAC
0VAC
18VAC
18VAC
RL1 COIL
25130
F2
2A
L2
480VAC
F1
2A
L1
IGBT THERMAL SW
TBX1
1K IGBT CODE
SINGLE IGBT DRIVE ASSEMLY PANEL
R1A 100 1%
R1B 100 1%
R1 1 1% 10W
PRIMARY CURRENT TRANSFORMER 1000/1
AMPS / VOLT = 750
CABINET GND
INTERTRON INDUSTRIES, INC.
POWER DRIVER WIRING DIAGRAM
Title
INVERTER DRIVER 900 AMP IGBT'S
Size B
Document Number 155-036-01-71
REV B
Date: June 27, 2005
Sheet 1 of 1
INV.A71

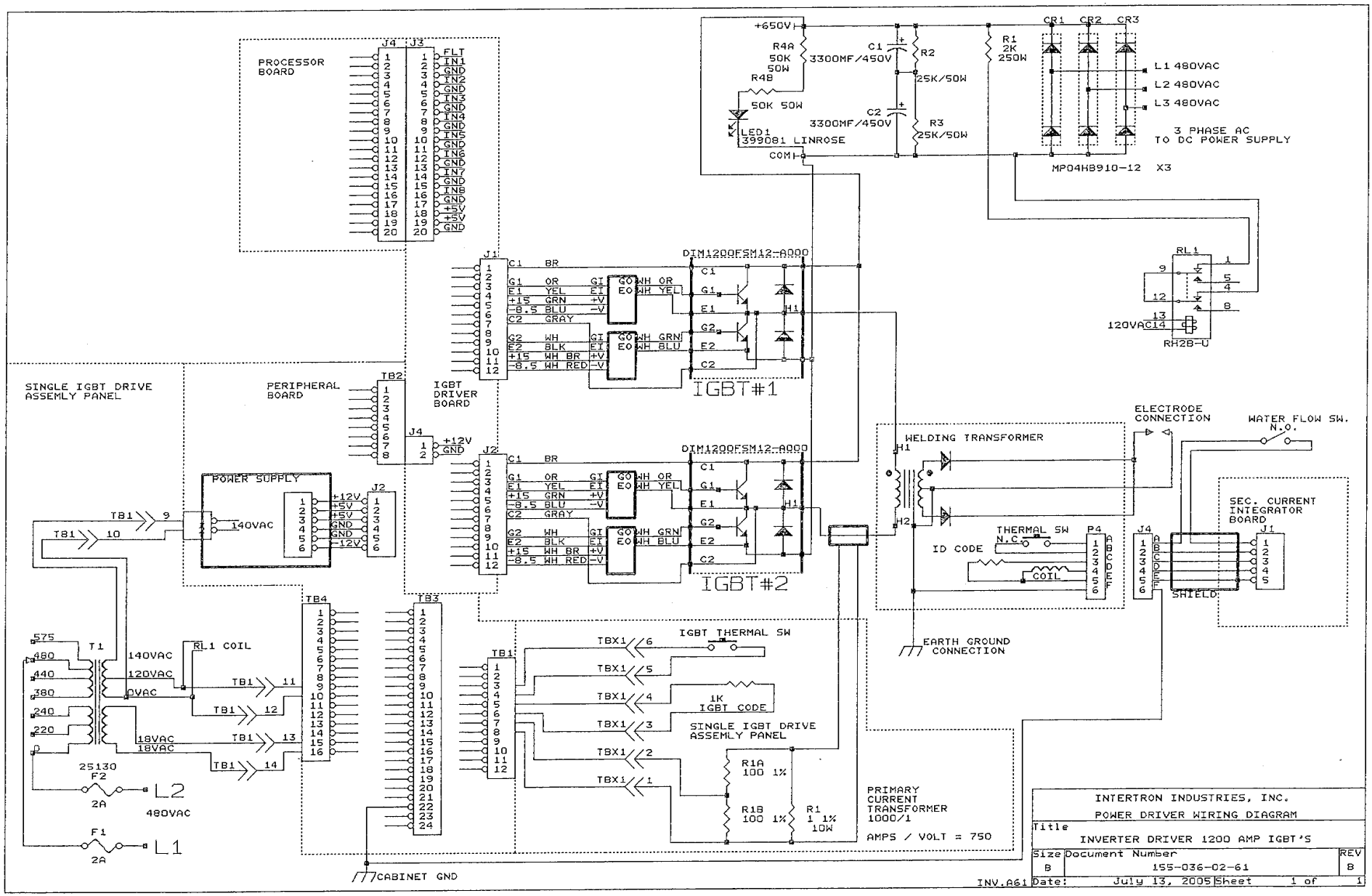
PROCESSOR BOARD
J4 J3
FLT
IN1
GND
IN2
GND
IN3
GND
IN4
GND
IN5
GND
IN6
GND
IN7
GND
IN8
GND
+5V
+5V
GND
+650V
R4A
50K
50W
R4B
50K 50W
C1
3300MF/450V
C2
3300MF/450V
R2
25K/50W
R3
25K/50W
R1
2K
250W
LED1
399081 LINROSE
COM
CR1 CR2 CR3
L1 480VAC
L2 480VAC
L3 480VAC
3 PHASE AC
TO DC POWER SUPPLY
MP04HB910-12 X3
RL1
120VAC
RH2B-U
DIM1200FSM12-A000
IGBT#1
IGBT#2
IGBT DRIVER BOARD
SINGLE IGBT DRIVE ASSEMLY PANEL
PERIPHERAL BOARD
TB2
J4
+12V
GND
POWER SUPPLY
140VAC
TB1 9
TB1 10
WELDING TRANSFORMER
H1
H2
ELECTRODE CONNECTION
WATER FLOW SW.
N.O.
THERMAL SW
N.C
ID CODE
COIL
P4
J4
SHIELD
J1
SEC. CURRENT INTEGRATOR BOARD
EARTH GROUND CONNECTION
T1
575
480
440
380
240
220
140VAC
120VAC
0VAC
18VAC
18VAC
25130
F2
2A
L2
480VAC
F1
2A
L1
RL1 COIL
TB1 11
TB1 12
TB1 13
TB1 14
TB4
TB3
TB1
IGBT THERMAL SW
TBX1 6
TBX1 5
TBX1 4
TBX1 3
TBX1 2
TBX1 1
1K
IGBT CODE
SINGLE IGBT DRIVE ASSEMLY PANEL
R1A
100 1%
R1B
100 1%
R1
1 1%
10W
PRIMARY CURRENT TRANSFORMER
1000/1
AMPS / VOLT = 750
CABINET GND
INTERTRON INDUSTRIES, INC.
POWER DRIVER WIRING DIAGRAM
Title
INVERTER DRIVER 1200 AMP IGBT'S
Size B
Document Number 155-036-02-61
REV B
INV.A61
Date: July 13, 2005
Sheet 1 of 1

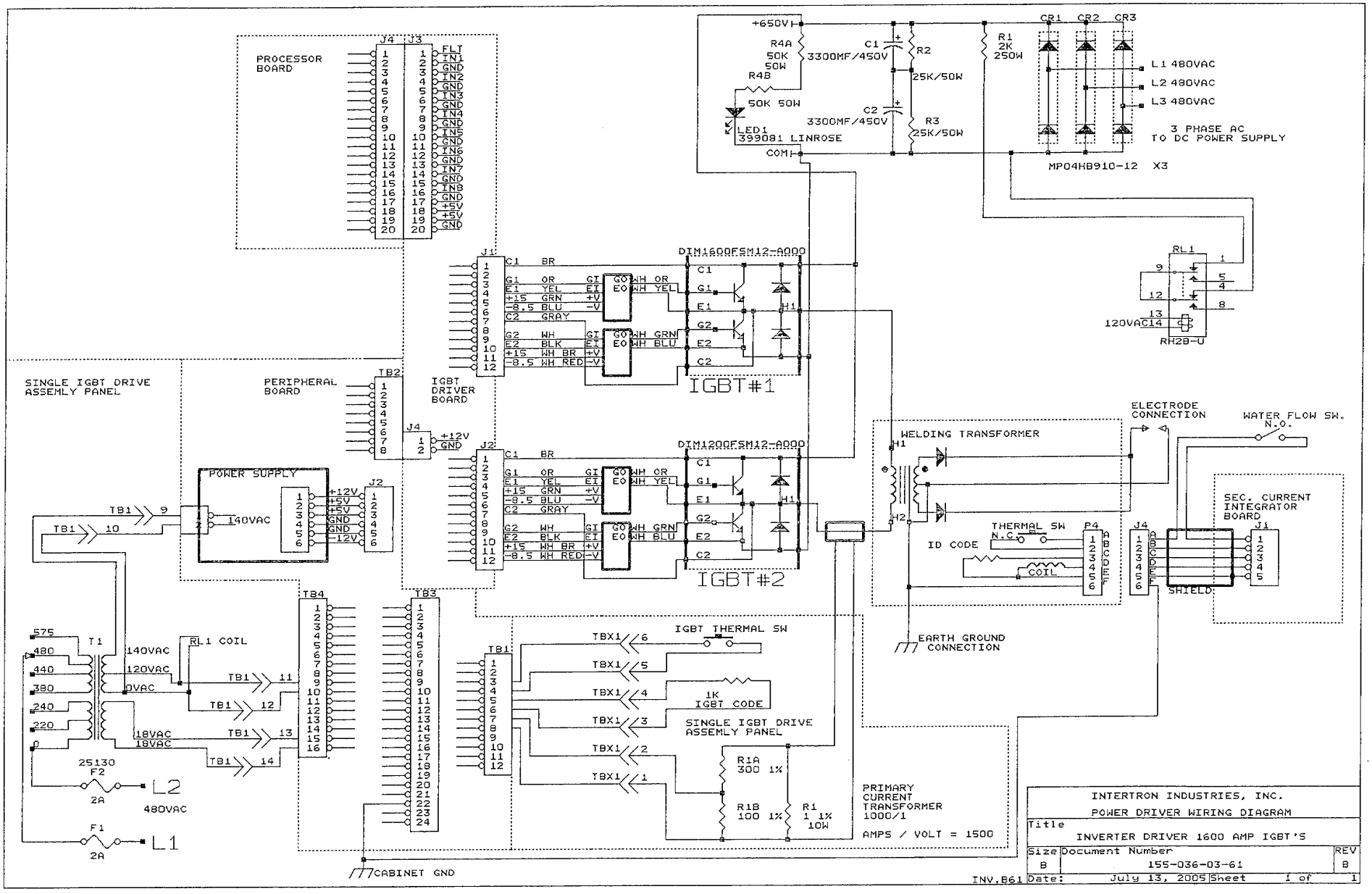
PROCESSOR BOARD
J4 J3
FLT
IN1
GND
IN2
GND
IN3
GND
IN4
GND
IN5
GND
IN6
GND
IN7
GND
IN8
GND
+5V
+5V
GND
+650V
R4A 50K 50W
R4B 50K 50W
C1 3300MF/450V
C2 3300MF/450V
R2 25K/50W
R3 25K/50W
R1 2K 250W
LED1 399081 LINROSE
COM
CR1 CR2 CR3
L1 480VAC
L2 480VAC
L3 480VAC
3 PHASE AC TO DC POWER SUPPLY
MP04HB910-12 X3
RL1
120VAC
RH2B-U
SINGLE IGBT DRIVE ASSEMLY PANEL
PERIPHERAL BOARD
IGBT DRIVER BOARD
TB2
J4 +12V GND
J1
J2
DIM1600FSM12-A000
IGBT#1
DIM1200FSM12-A000
IGBT#2
POWER SUPPLY
140VAC
+12V
+5V
+5V
GND
GND
-12V
TB1 9
TB1 10
WELDING TRANSFORMER
H1
H2
ELECTRODE CONNECTION
WATER FLOW SW. N.O.
THERMAL SW N.C.
ID CODE
COIL
P4
J4
J1
SEC. CURRENT INTEGRATOR BOARD
SHIELD
EARTH GROUND CONNECTION
575
480
440
380
240
220
0
T1
140VAC
120VAC
0VAC
18VAC
18VAC
RL1 COIL
TB1 11
TB1 12
TB1 13
TB1 14
TB4
TB3
TB1
IGBT THERMAL SW
TBX1 6
TBX1 5
TBX1 4
TBX1 3
TBX1 2
TBX1 1
1K IGBT CODE
SINGLE IGBT DRIVE ASSEMLY PANEL
R1A 300 1%
R1B 100 1%
R1 1 1% 10W
PRIMARY CURRENT TRANSFORMER 1000/1
AMPS / VOLT = 1500
25130
F2
2A
L2
480VAC
F1
2A
L1
CABINET GND
INTERTRON INDUSTRIES, INC.
POWER DRIVER WIRING DIAGRAM
Title
INVERTER DRIVER 1600 AMP IGBT'S
Size B
Document Number 155-036-03-61
REV B
Date: July 13, 2005
Sheet 1 of 1
INV,B61

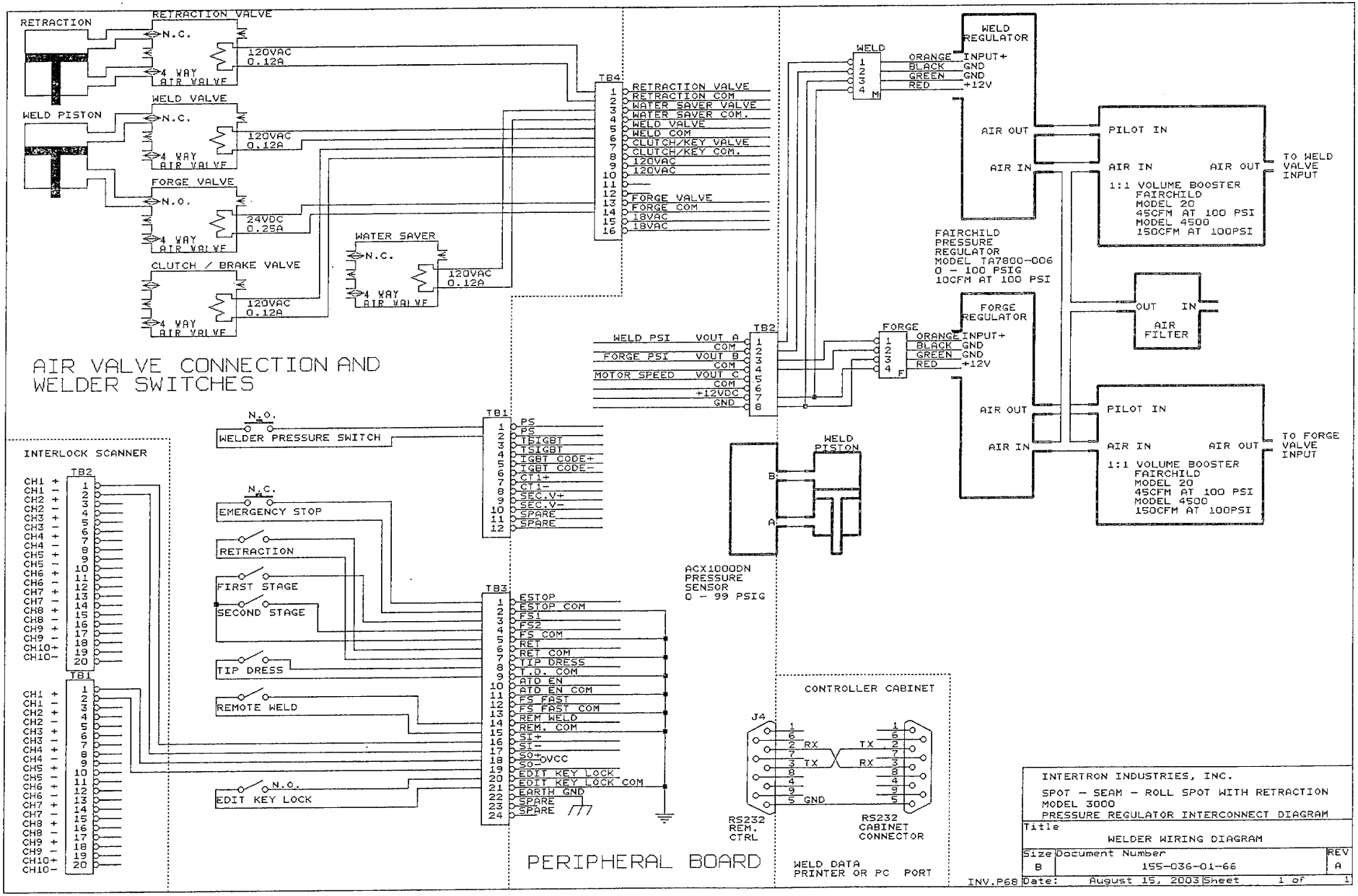
RETRACTION
RETRACTION VALVE
N.C.
120VAC
0.12A
4 WAY
AIR VALVE
WELD PISTON
WELD VALVE
FORGE VALVE
N.O.
24VDC
0.25A
CLUTCH / BRAKE VALVE
WATER SAVER
TB4
RETRACTION VALVE
RETRACTION COM
WATER SAVER VALVE
WATER SAVER COM.
WELD VALVE
WELD COM
CLUTCH/KEY VALVE
CLUTCH/KEY COM.
120VAC
120VAC
FORGE VALVE
FORGE COM
18VAC
18VAC
AIR VALVE CONNECTION AND
WELDER SWITCHES
WELD
ORANGE INPUT+
BLACK GND
GREEN GND
RED +12V
WELD
REGULATOR
AIR OUT
AIR IN
PILOT IN
AIR IN
AIR OUT
TO WELD
VALVE
INPUT
1:1 VOLUME BOOSTER
FAIRCHILD
MODEL 20
45CFM AT 100 PSI
MODEL 4500
150CFM AT 100PSI
FAIRCHILD
PRESSURE
REGULATOR
MODEL TA7800-006
0 - 100 PSIG
10CFM AT 100 PSI
OUT
IN
AIR
FILTER
WELD PSI VOUT A
COM
FORGE PSI VOUT B
COM
MOTOR SPEED VOUT C
COM
+12VDC
GND
TB2
FORGE
REGULATOR
FORGE
ORANGE INPUT+
BLACK GND
GREEN GND
RED +12V
AIR OUT
AIR IN
PILOT IN
AIR IN
AIR OUT
TO FORGE
VALVE
INPUT
1:1 VOLUME BOOSTER
FAIRCHILD
MODEL 20
45CFM AT 100 PSI
MODEL 4500
150CFM AT 100PSI
WELD
PISTON
B
A
ACX1000DN
PRESSURE
SENSOR
0 - 99 PSIG
INTERLOCK SCANNER
TB2
TB1
N.O.
WELDER PRESSURE SWITCH
N.C.
EMERGENCY STOP
RETRACTION
FIRST STAGE
SECOND STAGE
TIP DRESS
REMOTE WELD
N.O.
EDIT KEY LOCK
TB1
PS
PS
IBIGBT
ISIGBT
IGBT CODE+
IGBT CODE-
CT1+
CT1-
SEC.V+
SEC.V-
SPARE
SPARE
TB3
ESTOP
ESTOP COM
FS1
FS2
FS COM
RET
RET COM
TIP DRESS
T.D. COM
ATD EN
ATD EN COM
FS FAST
FS FAST COM
REM WELD
REM. COM
SI+
SI-
SO+
SO-
+VCC
EDIT KEY LOCK
EDIT KEY LOCK COM
EARTH GND
SPARE
SPARE
PERIPHERAL BOARD
CONTROLLER CABINET
J4
RX
TX
TX
RX
GND
RS232
REM.
CTRL
RS232
CABINET
CONNECTOR
WELD DATA
PRINTER OR PC PORT
INTERTRON INDUSTRIES, INC.
SPOT - SEAM - ROLL SPOT WITH RETRACTION
MODEL 3000
PRESSURE REGULATOR INTERCONNECT DIAGRAM
Title
WELDER WIRING DIAGRAM
Size
B
Document Number
155-036-01-66
REV
A
INV.P68
Date: August 15, 2003 Sheet 1 of 1

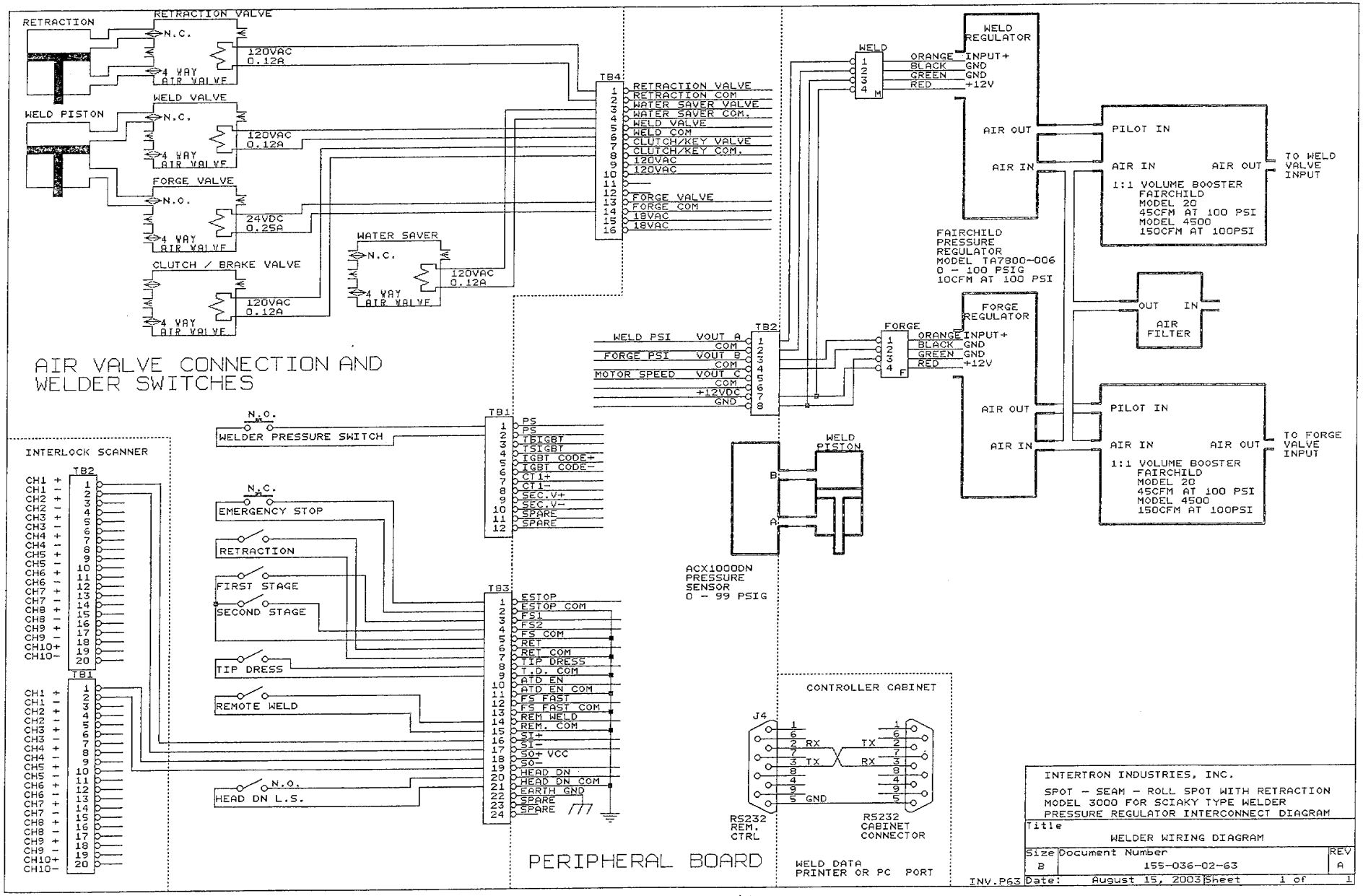
RETRACTION
RETRACTION VALVE
N.C.
120VAC
0.12A
4 WAY
AIR VALVE
WELD PISTON
WELD VALVE
FORGE VALVE
N.O.
24VDC
0.25A
CLUTCH / BRAKE VALVE
WATER SAVER
TB4
RETRACTION VALVE
RETRACTION COM
WATER SAVER VALVE
WATER SAVER COM.
WELD VALVE
WELD COM
CLUTCH/KEY VALVE
CLUTCH/KEY COM.
120VAC
120VAC
FORGE VALVE
FORGE COM
18VAC
18VAC
AIR VALVE CONNECTION AND
WELDER SWITCHES
WELD
WELD REGULATOR
ORANGE INPUT+
BLACK GND
GREEN GND
RED +12V
AIR OUT
AIR IN
PILOT IN
AIR IN
AIR OUT
TO WELD VALVE INPUT
1:1 VOLUME BOOSTER
FAIRCHILD
MODEL 20
45CFM AT 100 PSI
MODEL 4500
150CFM AT 100PSI
FAIRCHILD
PRESSURE
REGULATOR
MODEL TA7800-006
0 - 100 PSIG
10CFM AT 100 PSI
OUT IN
AIR
FILTER
TB2
WELD PSI VOUT A
COM
FORGE PSI VOUT B
COM
MOTOR SPEED VOUT C
COM
+12VDC
GND
FORGE
FORGE REGULATOR
ORANGE INPUT+
BLACK GND
GREEN GND
RED +12V
AIR OUT
AIR IN
PILOT IN
AIR IN
AIR OUT
TO FORGE VALVE INPUT
1:1 VOLUME BOOSTER
FAIRCHILD
MODEL 20
45CFM AT 100 PSI
MODEL 4500
150CFM AT 100PSI
WELD PISTON
B
A
ACX10000DN
PRESSURE
SENSOR
0 - 99 PSIG
INTERLOCK SCANNER
TB2
CH1 +
CH1 -
CH2 +
CH2 -
CH3 +
CH3 -
CH4 +
CH4 -
CH5 +
CH5 -
CH6 +
CH6 -
CH7 +
CH7 -
CH8 +
CH8 -
CH9 +
CH9 -
CH10+
CH10-
TB1
N.O.
WELDER PRESSURE SWITCH
N.C.
EMERGENCY STOP
RETRACTION
FIRST STAGE
SECOND STAGE
TIP DRESS
REMOTE WELD
N.O.
HEAD DN L.S.
TB1
PS
PS
TDIGBT
TSIGBT
IGBT CODE+
IGBT CODE-
CT1+
CT1-
SEC.V+
SEC.V-
SPARE
SPARE
TB3
ESTOP
ESTOP COM
FS1
FS2
FS COM
RET
RET COM
TIP DRESS
T.D. COM
ATD EN
ATD EN COM
FS FAST
FS FAST COM
REM WELD
REM. COM
SI+
SI-
SO+ VCC
SO-
HEAD DN
HEAD DN COM
EARTH GND
SPARE
SPARE
PERIPHERAL BOARD
CONTROLLER CABINET
J4
RX
TX
TX
RX
GND
RS232
REM.
CTRL
RS232
CABINET
CONNECTOR
WELD DATA
PRINTER OR PC PORT
INTERTRON INDUSTRIES, INC.
SPOT - SEAM - ROLL SPOT WITH RETRACTION
MODEL 3000 FOR SCIAKY TYPE WELDER
PRESSURE REGULATOR INTERCONNECT DIAGRAM
Title
WELDER WIRING DIAGRAM
Size B
Document Number 155-036-02-63
REV A
INV.P63
Date: August 15, 2003
Sheet 1 of 1

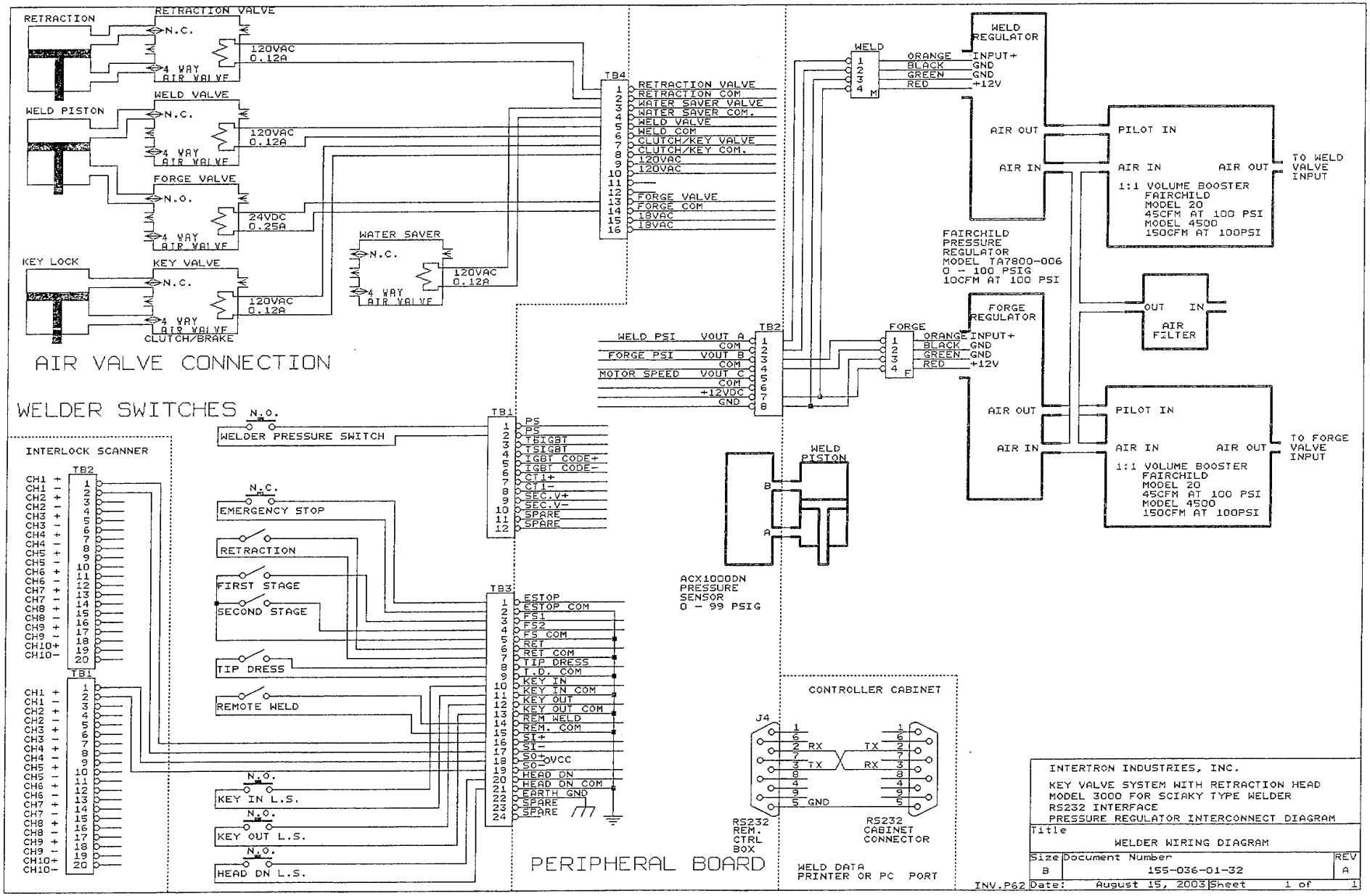
AIR VALVE CONNECTION
WELDER SWITCHES
PERIPHERAL BOARD
RETRACTION
RETRACTION VALVE
WELD PISTON
WELD VALVE
FORGE VALVE
KEY LOCK
KEY VALVE
CLUTCH/BRAKE
WATER SAVER
120VAC 0.12A
24VDC 0.25A
4 WAY AIR VALVE
TB4
TB1
TB2
TB3
WELDER PRESSURE SWITCH
EMERGENCY STOP
RETRACTION
FIRST STAGE
SECOND STAGE
TIP DRESS
REMOTE WELD
KEY IN L.S.
KEY OUT L.S.
HEAD DN L.S.
INTERLOCK SCANNER
WELD REGULATOR
FORGE REGULATOR
FAIRCHILD PRESSURE REGULATOR MODEL TA7800-006 0 - 100 PSIG 10CFM AT 100 PSI
1:1 VOLUME BOOSTER FAIRCHILD MODEL 20 45CFM AT 100 PSI MODEL 4500 150CFM AT 100PSI
AIR FILTER
WELD PISTON
ACX1000DN PRESSURE SENSOR 0 - 99 PSIG
CONTROLLER CABINET
RS232 REM. CTRL BOX
RS232 CABINET CONNECTOR
WELD DATA PRINTER OR PC PORT
INTERTRON INDUSTRIES, INC.
KEY VALVE SYSTEM WITH RETRACTION HEAD
MODEL 3000 FOR SCIAKY TYPE WELDER
RS232 INTERFACE
PRESSURE REGULATOR INTERCONNECT DIAGRAM
WELDER WIRING DIAGRAM
155-036-01-32
INV.P62 Date: August 15, 2003 Sheet 1 of 1

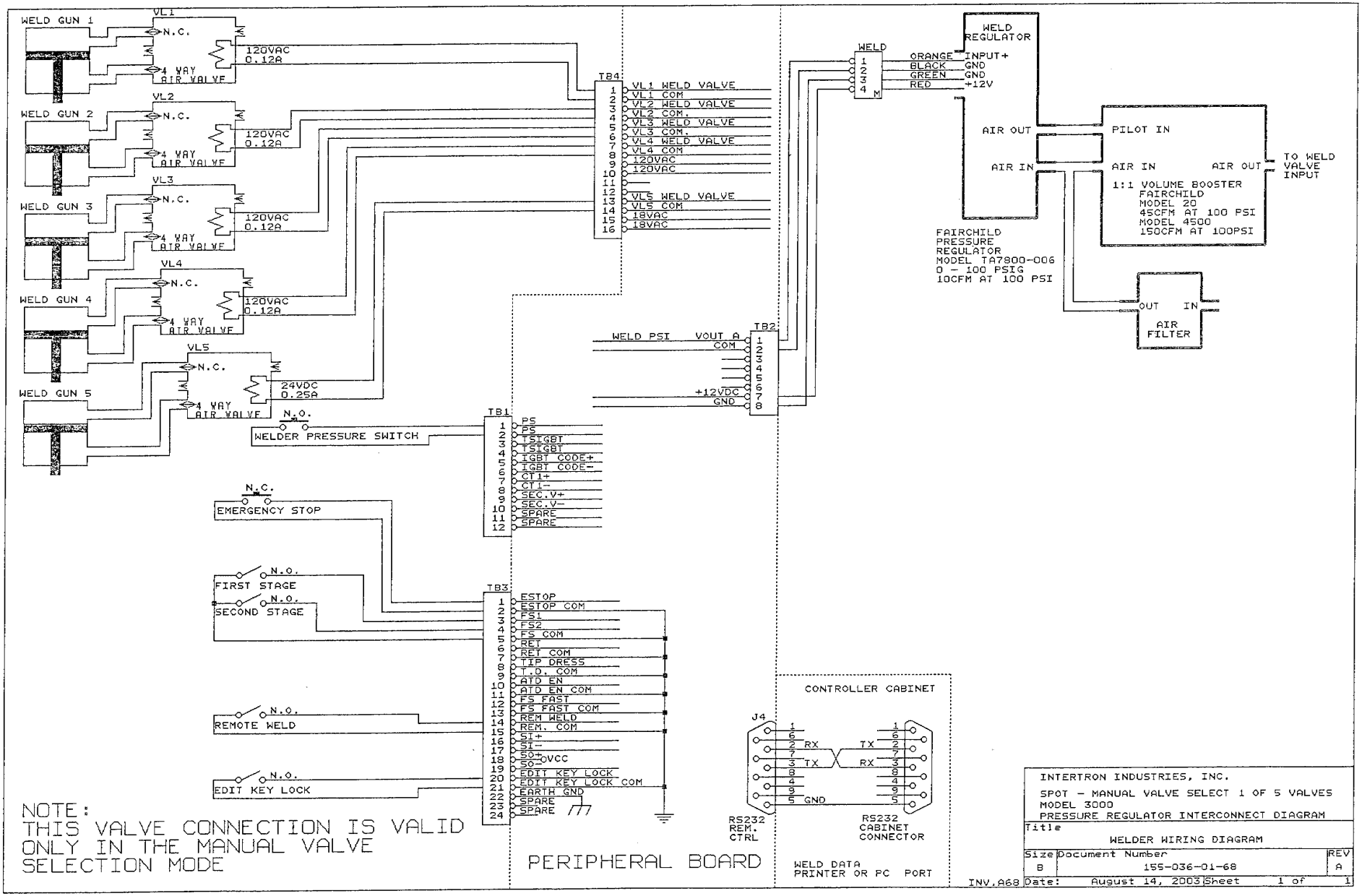
WELD GUN 1
VL1
N.C.
4 WAY AIR VALVE
120VAC 0.12A
WELD GUN 2
VL2
WELD GUN 3
VL3
WELD GUN 4
VL4
WELD GUN 5
VL5
24VDC 0.25A
TB4
VL1 WELD VALVE
VL1 COM
VL2 WELD VALVE
VL2 COM.
VL3 WELD VALVE
VL3 COM.
VL4 WELD VALVE
VL4 COM
120VAC
120VAC
VL5 WELD VALVE
VL5 COM
18VAC
18VAC
WELD
ORANGE INPUT+
BLACK GND
GREEN GND
RED +12V
WELD REGULATOR
AIR OUT
PILOT IN
AIR IN
AIR IN
AIR OUT
TO WELD VALVE INPUT
1:1 VOLUME BOOSTER
FAIRCHILD
MODEL 20
45CFM AT 100 PSI
MODEL 4500
150CFM AT 100PSI
FAIRCHILD PRESSURE REGULATOR
MODEL TA7800-006
0 - 100 PSIG
10CFM AT 100 PSI
OUT IN
AIR FILTER
TB2
WELD PSI
VOUT A
COM
+12VDC
GND
TB1
PS
PS
ISIGBT
ISIGBT
IGBT CODE+
IGBT CODE-
CT1+
CT1-
SEC.V+
SEC.V-
SPARE
SPARE
N.O.
WELDER PRESSURE SWITCH
N.C.
EMERGENCY STOP
N.O.
FIRST STAGE
N.O.
SECOND STAGE
N.O.
REMOTE WELD
N.O.
EDIT KEY LOCK
TB3
ESTOP
ESTOP COM
FS1
FS2
FS COM
RET
RET COM
TIP DRESS
T.D. COM
AID EN
AID EN COM
FS FAST
FS FAST COM
REM WELD
REM. COM
SI+
SI-
SO+
SO-
VCC
EDIT KEY LOCK
EDIT KEY LOCK COM
EARTH GND
SPARE
SPARE
CONTROLLER CABINET
J4
RX
TX
TX
RX
GND
RS232 REM. CTRL
RS232 CABINET CONNECTOR
WELD DATA PRINTER OR PC PORT
NOTE:
THIS VALVE CONNECTION IS VALID ONLY IN THE MANUAL VALVE SELECTION MODE
PERIPHERAL BOARD
INTERTRON INDUSTRIES, INC.
SPOT - MANUAL VALVE SELECT 1 OF 5 VALVES
MODEL 3000
PRESSURE REGULATOR INTERCONNECT DIAGRAM
Title
WELDER WIRING DIAGRAM
Size B
Document Number 155-036-01-68
REV A
INV.A68
Date: August 14, 2003 Sheet 1 of 1

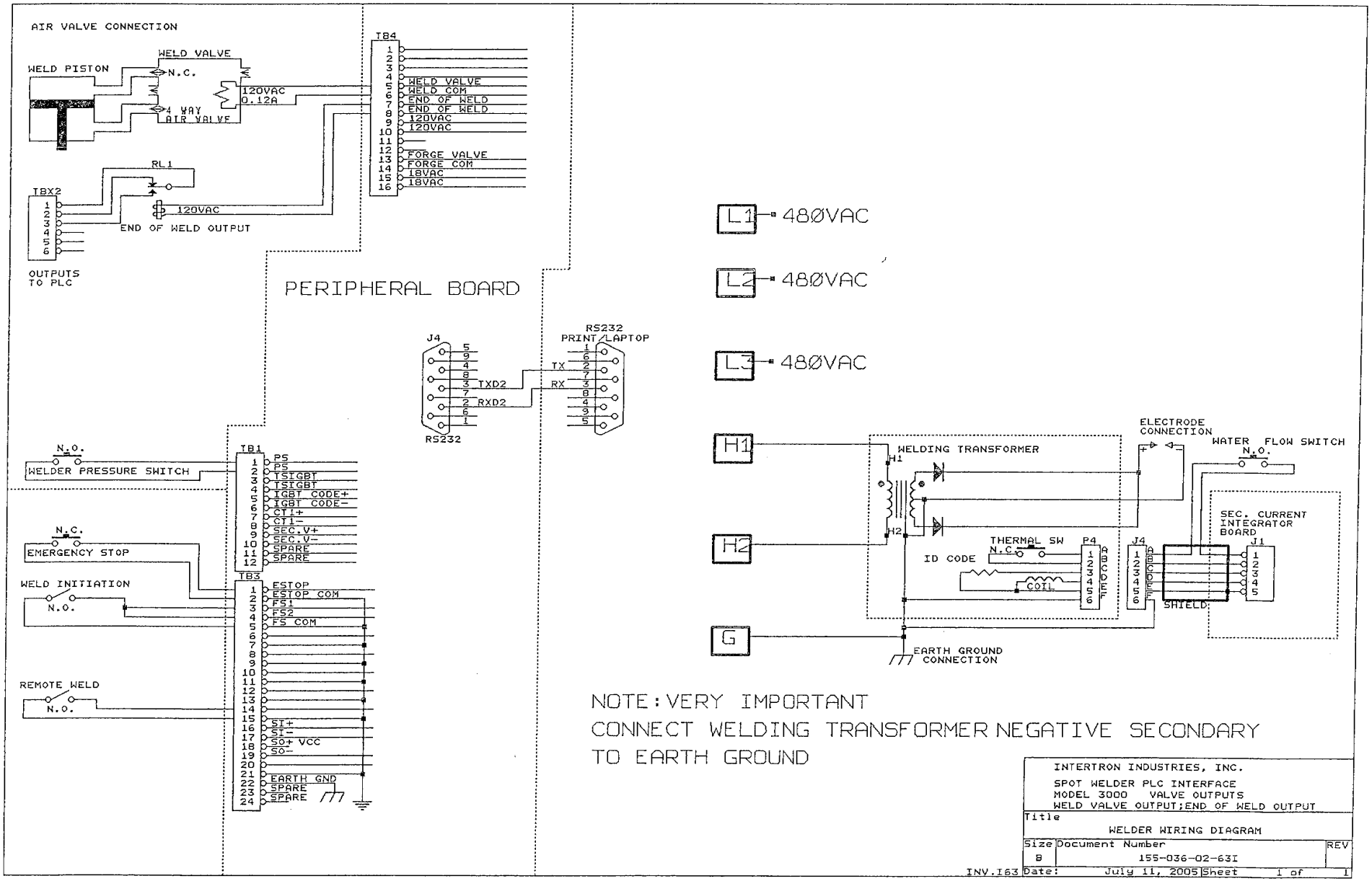

NOTE: VERY IMPORTANT
CONNECT WELDING TRANSFORMER NEGATIVE SECONDARY TO EARTH GROUND

INTERTRON INDUSTRIES, INC.

SPOT WELDER PLC INTERFACE
MODEL 3000 VALVE OUTPUTS
WELD VALVE OUTPUT; END OF WELD OUTPUT

Title: WELDER WIRING DIAGRAM

Size	Document Number	REV
B	155-036-02-63I	

INV.I63 Date: July 11, 2005 Sheet 1 of 1

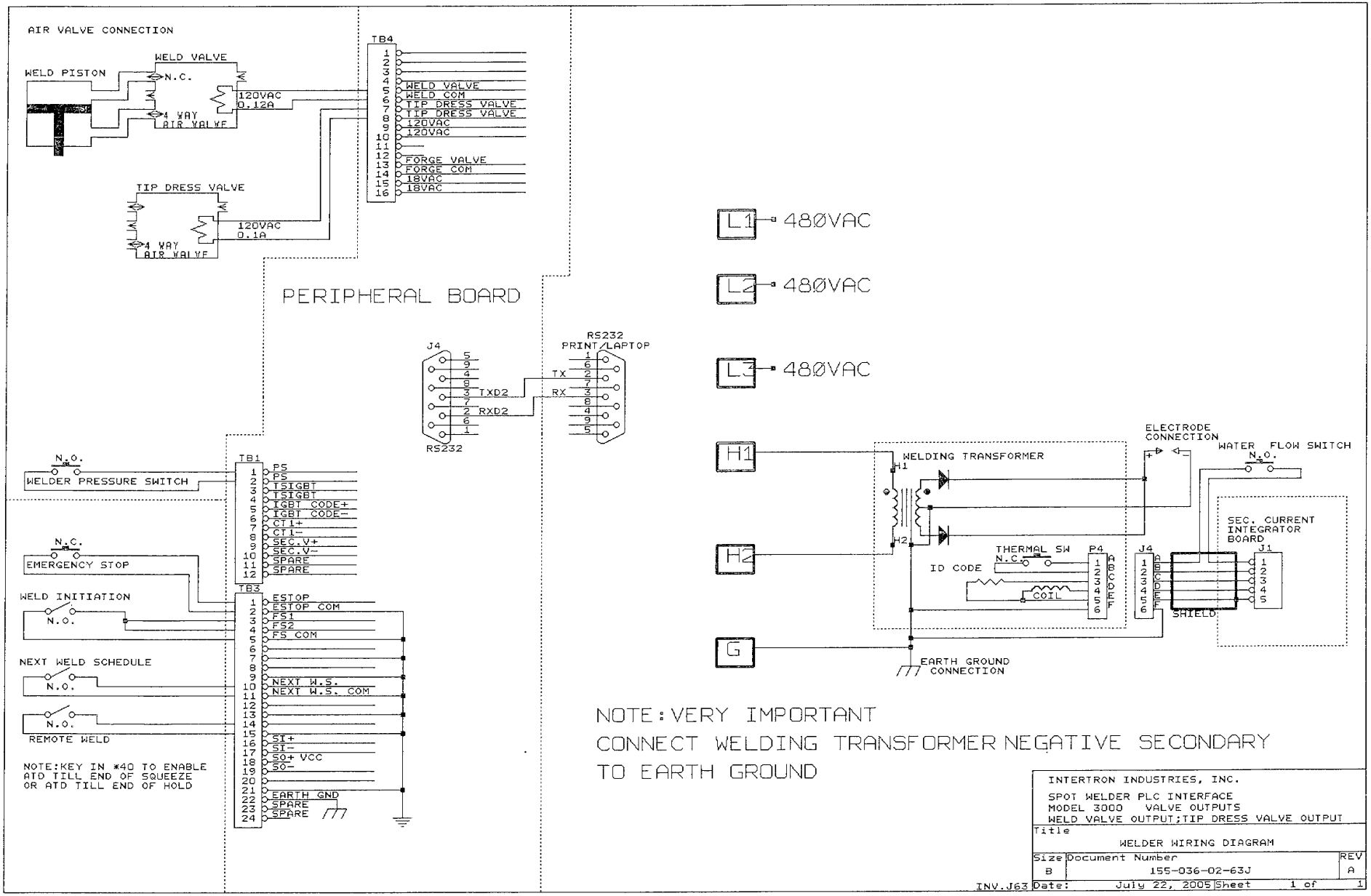
AIR VALVE CONNECTION
WELD VALVE
WELD PISTON
N.C.
120VAC
0.12A
4 WAY
AIR VALVE
TIP DRESS VALVE
120VAC
0.1A
4 WAY
AIR VALVE
TB4
1
2
3
4 WELD VALVE
5 WELD COM
6 TIP DRESS VALVE
7 TIP DRESS VALVE
8 120VAC
9 120VAC
10
11
12 FORGE VALVE
13 FORGE COM
14 18VAC
15 18VAC
16
PERIPHERAL BOARD
J4
RS232
PRINT/LAPTOP
TX
RX
TXD2
RXD2
RS232
N.O.
WELDER PRESSURE SWITCH
TB1
1 PS
2 PS
3 TSIGBT
4 TSIGBT
5 IGBT CODE+
6 IGBT CODE-
7 CT 1+
8 CT 1-
9 SEC.V+
10 SEC.V-
11 SPARE
12 SPARE
N.C.
EMERGENCY STOP
WELD INITIATION
N.O.
NEXT WELD SCHEDULE
N.O.
N.O.
REMOTE WELD
TB3
1 ESTOP
2 ESTOP COM
3 FS1
4 FS2
5 FS COM
6
7
8
9 NEXT W.S.
10 NEXT W.S. COM
11
12
13
14
15 SI+
16 SI-
17 SO+ VCC
18 SO-
19
20
21 EARTH GND
22 SPARE
23 SPARE
24
NOTE:KEY IN *40 TO ENABLE
ATD TILL END OF SQUEEZE
OR ATD TILL END OF HOLD
L1 480VAC
L2 480VAC
L3 480VAC
H1
H2
G
ELECTRODE
CONNECTION
WATER FLOW SWITCH
N.O.
WELDING TRANSFORMER
H1
H2
THERMAL SW
N.C.
ID CODE
COIL
P4
J4
J1
SHIELD
SEC. CURRENT
INTEGRATOR
BOARD
EARTH GROUND
CONNECTION
NOTE: VERY IMPORTANT
CONNECT WELDING TRANSFORMER NEGATIVE SECONDARY
TO EARTH GROUND
INTERTRON INDUSTRIES, INC.
SPOT WELDER PLC INTERFACE
MODEL 3000 VALVE OUTPUTS
WELD VALVE OUTPUT;TIP DRESS VALVE OUTPUT
Title
WELDER WIRING DIAGRAM
Size B
Document Number 155-036-02-63J
REV A
INV.J63
Date: July 22, 2005 Sheet 1 of 1

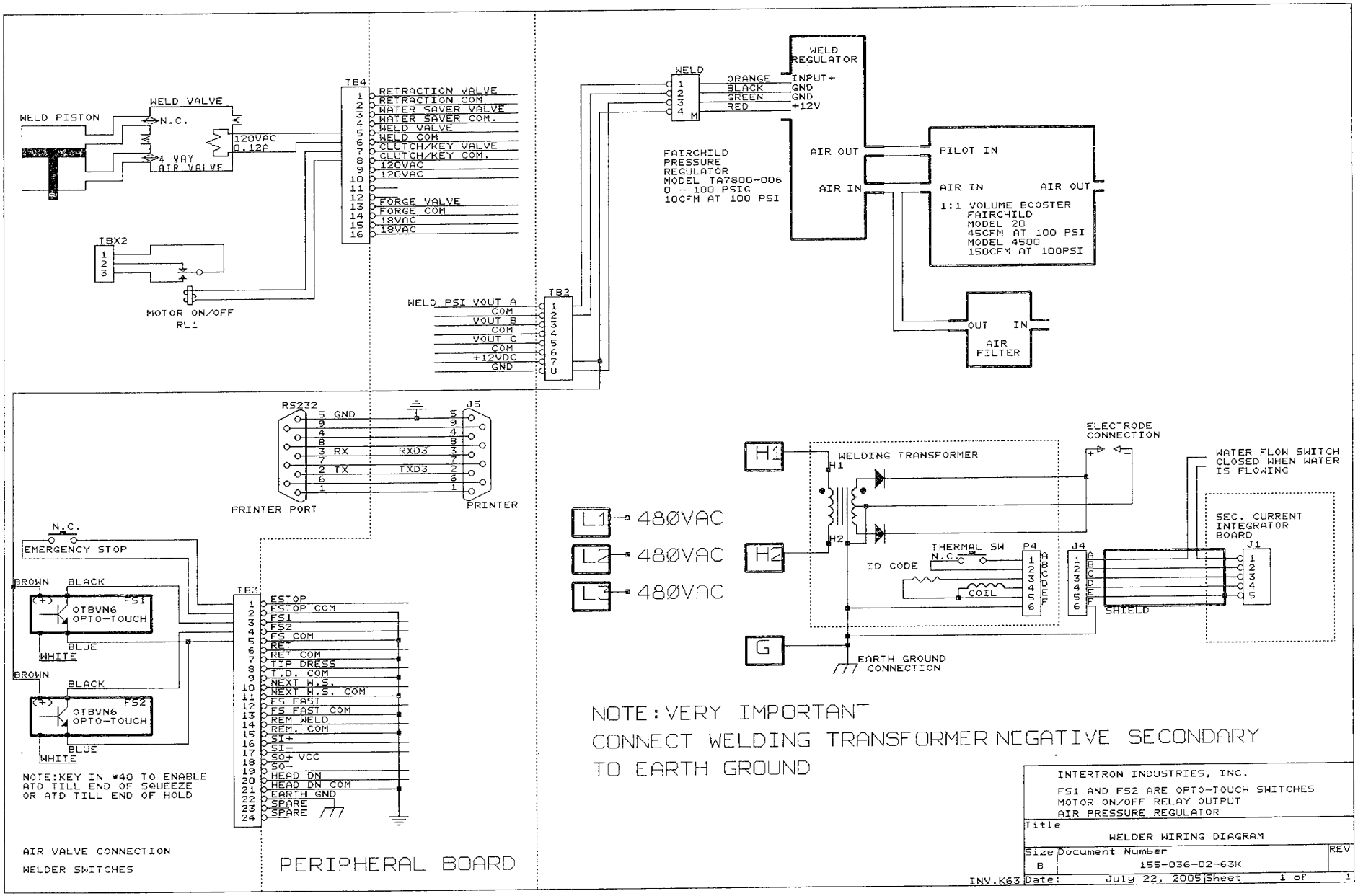
WELD VALVE
WELD PISTON
N.C.
4 WAY AIR VALVE
120VAC 0.12A
TB4
RETRACTION VALVE
RETRACTION COM
WATER SAVER VALVE
WATER SAVER COM.
WELD VALVE
WELD COM
CLUTCH/KEY VALVE
CLUTCH/KEY COM.
120VAC
120VAC
FORGE VALVE
FORGE COM
18VAC
18VAC
TBX2
MOTOR ON/OFF RL1
WELD
ORANGE INPUT+
BLACK GND
GREEN GND
RED +12V
M
WELD REGULATOR
FAIRCHILD PRESSURE REGULATOR MODEL TA7800-006 0 - 100 PSIG 10CFM AT 100 PSI
AIR OUT
AIR IN
PILOT IN
AIR IN AIR OUT
1:1 VOLUME BOOSTER FAIRCHILD MODEL 20 45CFM AT 100 PSI MODEL 4500 150CFM AT 100PSI
OUT IN
AIR FILTER
WELD PSI VOUT A
COM
VOUT B
COM
VOUT C
COM
+12VDC
GND
TB2
RS232
J5
PRINTER PORT
PRINTER
N.C.
EMERGENCY STOP
BROWN BLACK
(+) FS1
OTBVN6 OPTO-TOUCH
BLUE
WHITE
BROWN BLACK
(+) FS2
OTBVN6 OPTO-TOUCH
BLUE
WHITE
NOTE:KEY IN *40 TO ENABLE ATD TILL END OF SQUEEZE OR ATD TILL END OF HOLD
TB3
ESTOP
ESTOP COM
FS1
FS2
FS COM
RET
RET COM
TIP DRESS
T.D. COM
NEXT W.S.
NEXT W.S. COM
FS FAST
FS FAST COM
REM WELD
REM. COM
SI+
SI-
SO+ VCC
SO-
HEAD DN
HEAD DN COM
EARTH GND
SPARE
SPARE
AIR VALVE CONNECTION
WELDER SWITCHES
PERIPHERAL BOARD
L1 480VAC
L2 480VAC
L3 480VAC
H1
H2
G
WELDING TRANSFORMER
ELECTRODE CONNECTION
THERMAL SW N.C.
ID CODE
COIL
P4
J4
SHIELD
WATER FLOW SWITCH CLOSED WHEN WATER IS FLOWING
SEC. CURRENT INTEGRATOR BOARD
J1
EARTH GROUND CONNECTION
NOTE: VERY IMPORTANT
CONNECT WELDING TRANSFORMER NEGATIVE SECONDARY
TO EARTH GROUND
INTERTRON INDUSTRIES, INC.
FS1 AND FS2 ARE OPTO-TOUCH SWITCHES
MOTOR ON/OFF RELAY OUTPUT
AIR PRESSURE REGULATOR
Title
WELDER WIRING DIAGRAM
Size B
Document Number 155-036-02-63K
REV
INV.K63
Date: July 22, 2005
Sheet 1 of 1

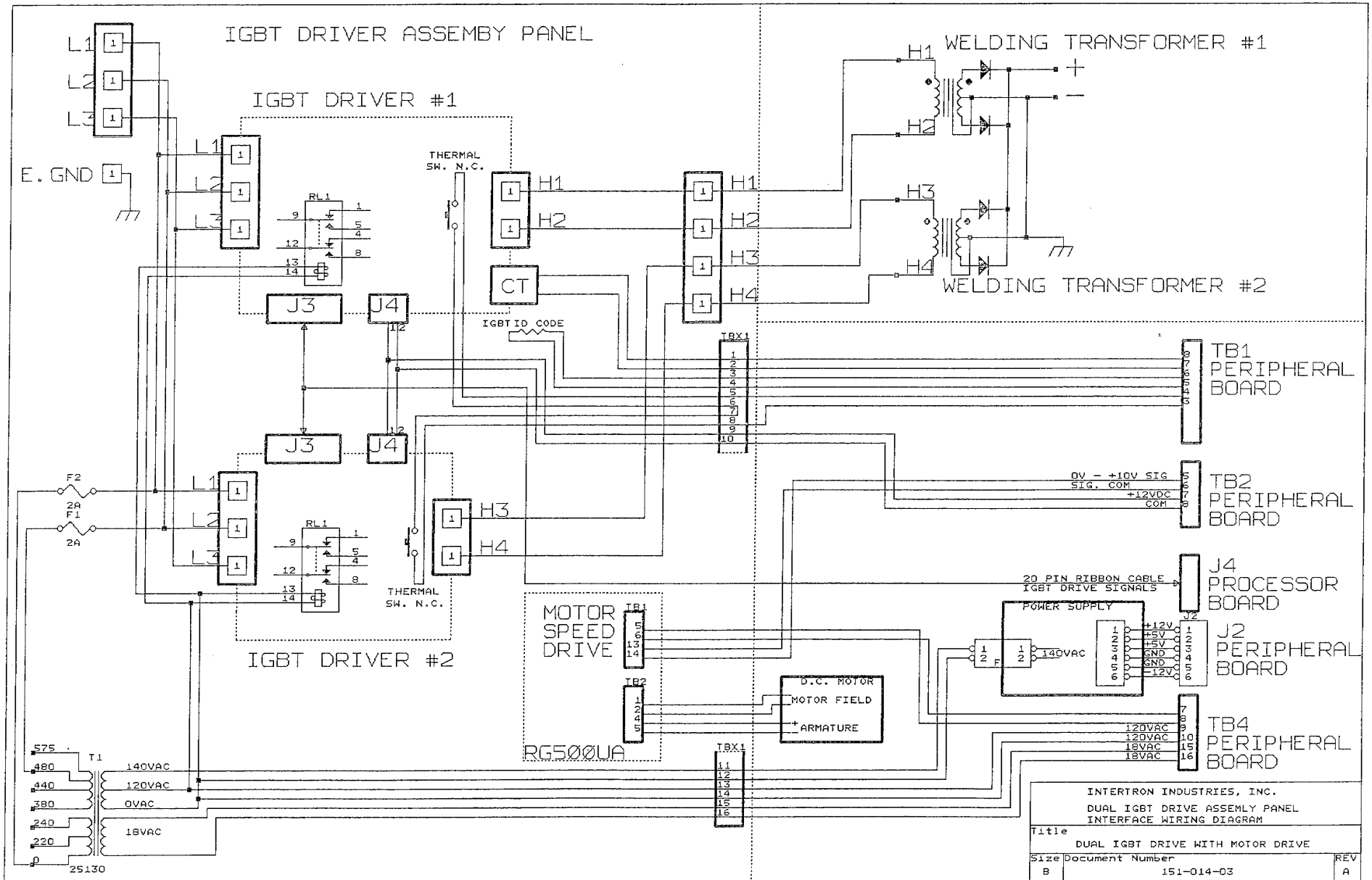
IGBT DRIVER ASSEMBY PANEL
IGBT DRIVER #1
IGBT DRIVER #2
WELDING TRANSFORMER #1
WELDING TRANSFORMER #2
L1
L2
L3
E. GND
THERMAL SW. N.C.
RL1
H1
H2
H3
H4
CT
J3
J4
IGBT ID CODE
TBX1
F2
2A
F1
2A
MOTOR SPEED DRIVE
RG500UA
IB1
IB2
D.C. MOTOR
MOTOR FIELD
ARMATURE
T1
575
480
440
380
240
220
0
25130
140VAC
120VAC
0VAC
18VAC
TB1 PERIPHERAL BOARD
TB2 PERIPHERAL BOARD
0V - +10V SIG
SIG. COM
+12VDC
COM
J4 PROCESSOR BOARD
20 PIN RIBBON CABLE
IGBT DRIVE SIGNALS
POWER SUPPLY
J2
J2 PERIPHERAL BOARD
+12V
+5V
+5V
GND
GND
-12V
TB4 PERIPHERAL BOARD
120VAC
120VAC
18VAC
18VAC
INTERTRON INDUSTRIES, INC.
DUAL IGBT DRIVE ASSEMLY PANEL
INTERFACE WIRING DIAGRAM
Title
DUAL IGBT DRIVE WITH MOTOR DRIVE
Size B
Document Number 151-014-03
REV A
INV.P69
Date: January 22, 2004
Sheet 1 of 1

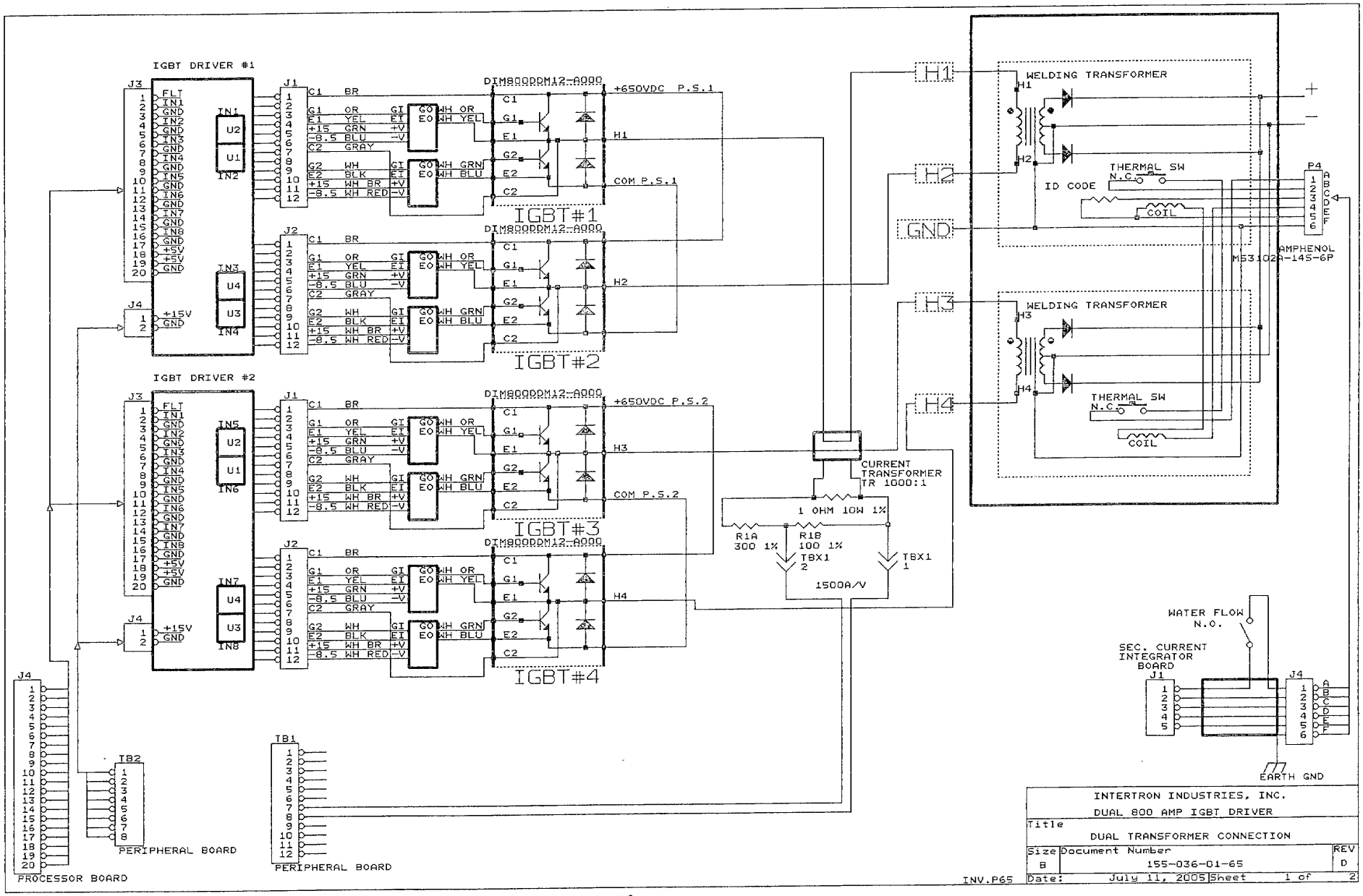
IGBT DRIVER #1
IGBT DRIVER #2
DIM800DDM12-A000
IGBT#1
IGBT#2
IGBT#3
IGBT#4
+650VDC P.S.1
+650VDC P.S.2
COM P.S.1
COM P.S.2
H1
H2
H3
H4
GND
WELDING TRANSFORMER
THERMAL SW
N.C.
ID CODE
COIL
AMPHENOL
MS3102A-14S-6P
CURRENT
TRANSFORMER
TR 1000:1
1 OHM 10W 1%
R1A
300 1%
R1B
100 1%
1500A/V
WATER FLOW
N.O.
SEC. CURRENT
INTEGRATOR
BOARD
EARTH GND
PROCESSOR BOARD
PERIPHERAL BOARD
PERIPHERAL BOARD
INTERTRON INDUSTRIES, INC.
DUAL 800 AMP IGBT DRIVER
Title
DUAL TRANSFORMER CONNECTION
Size B
Document Number 155-036-01-65
REV D
Date: July 11, 2005
Sheet 1 of 2
INV.P65

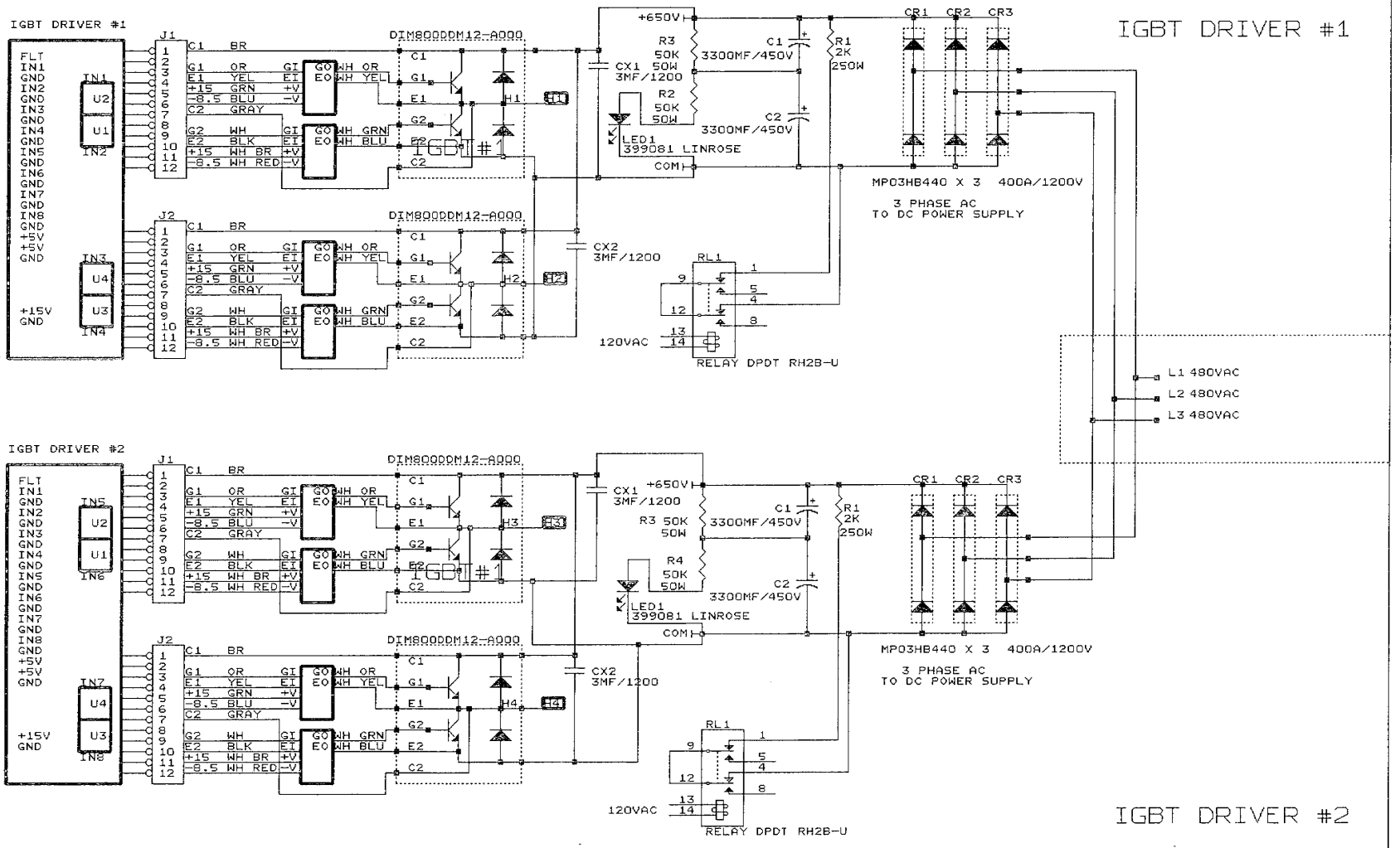

INTERTRON INDUSTRIES, INC.	
DUAL 800 AMP EA IGBT DRIVER	
Title: DUAL TRANSFORMER DRIVER CONNECTION	
Size: B	Document Number: 155-036-01-65 REV: C
INV.P66	Date: July 11, 2005 Sheet 2 of 2

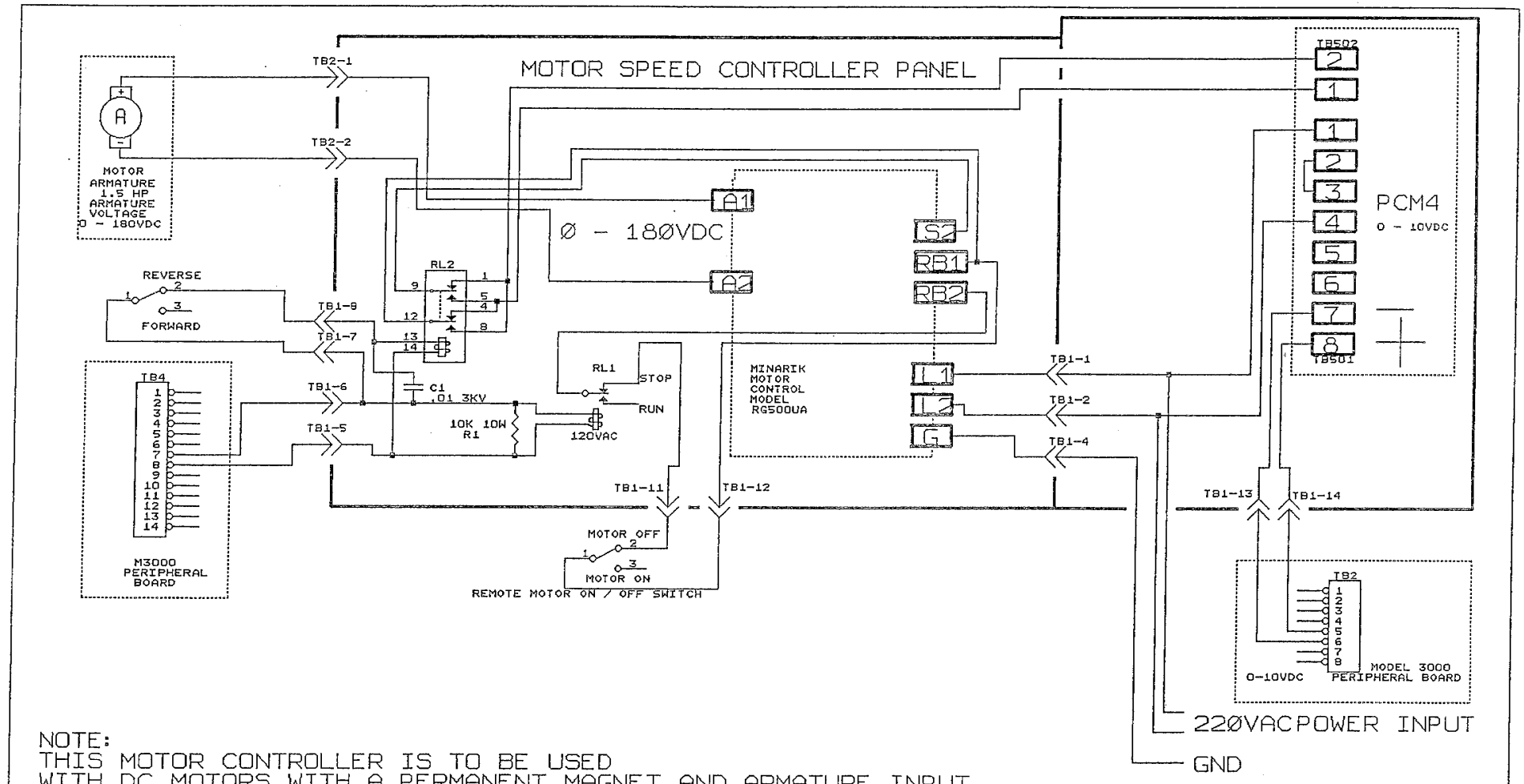

NOTE:
THIS MOTOR CONTROLLER IS TO BE USED
WITH DC MOTORS WITH A PERMANENT MAGNET AND ARMATURE INPUT

CONNECT JUMPER BETWEEN TB1-11 AND TB1-12
IF REMOTE MOTOR ON SWITCH IS NOT USED

INTERTRON INDUDTRIES, INC.		
ASSEMBLY WIRING DIAGRAM REGENERATIVE DRIVE PERMANENT MAGNET MOTOR		
Title: MODEL 3000 MOTOR SPEED CONTROL		
Size: B	Document Number: 146-010-04	REV: A
Date: June 12, 2002	Sheet 1 of 1	

INV.P74

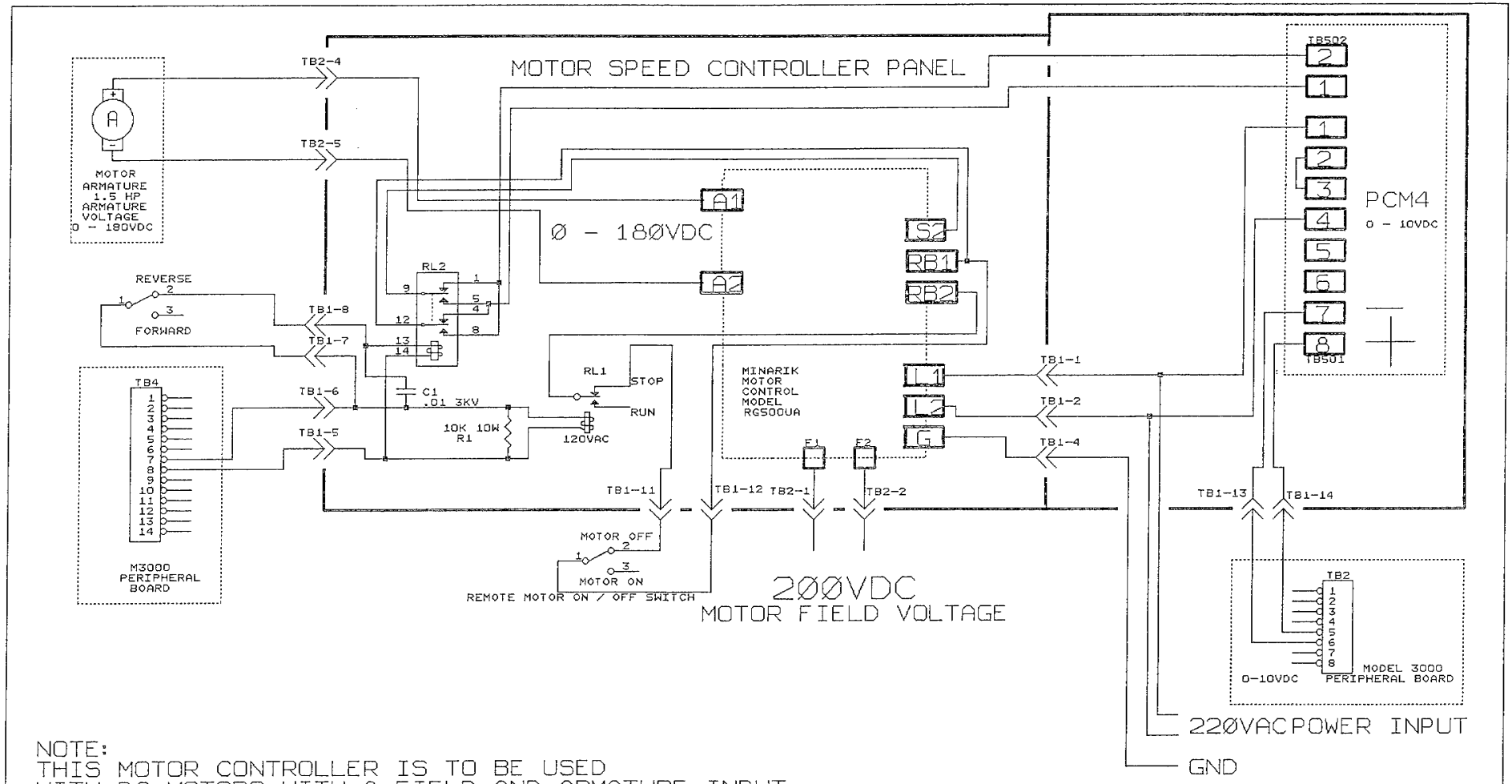

NOTE:
THIS MOTOR CONTROLLER IS TO BE USED
WITH DC MOTORS WITH A FIELD AND ARMATURE INPUT.

CONNECT JUMPER BETWEEN TB1-11 AND TB1-12
IF REMOTE MOTOR ON SWITCH IS NOT USED

INTERTRON INDUSTRIES, INC.		
ASSEMBLY WIRING DIAGRAM REGENERATIVE DRIVE ARMATURE AND FIELD DC MOTORS		
Title: MODEL 3000 MOTOR SPEED CONTROL		
Size: B	Document Number: 146-010-03	REV: B
Date: June 13, 2002	Sheet 1 of 1	

INV.P72

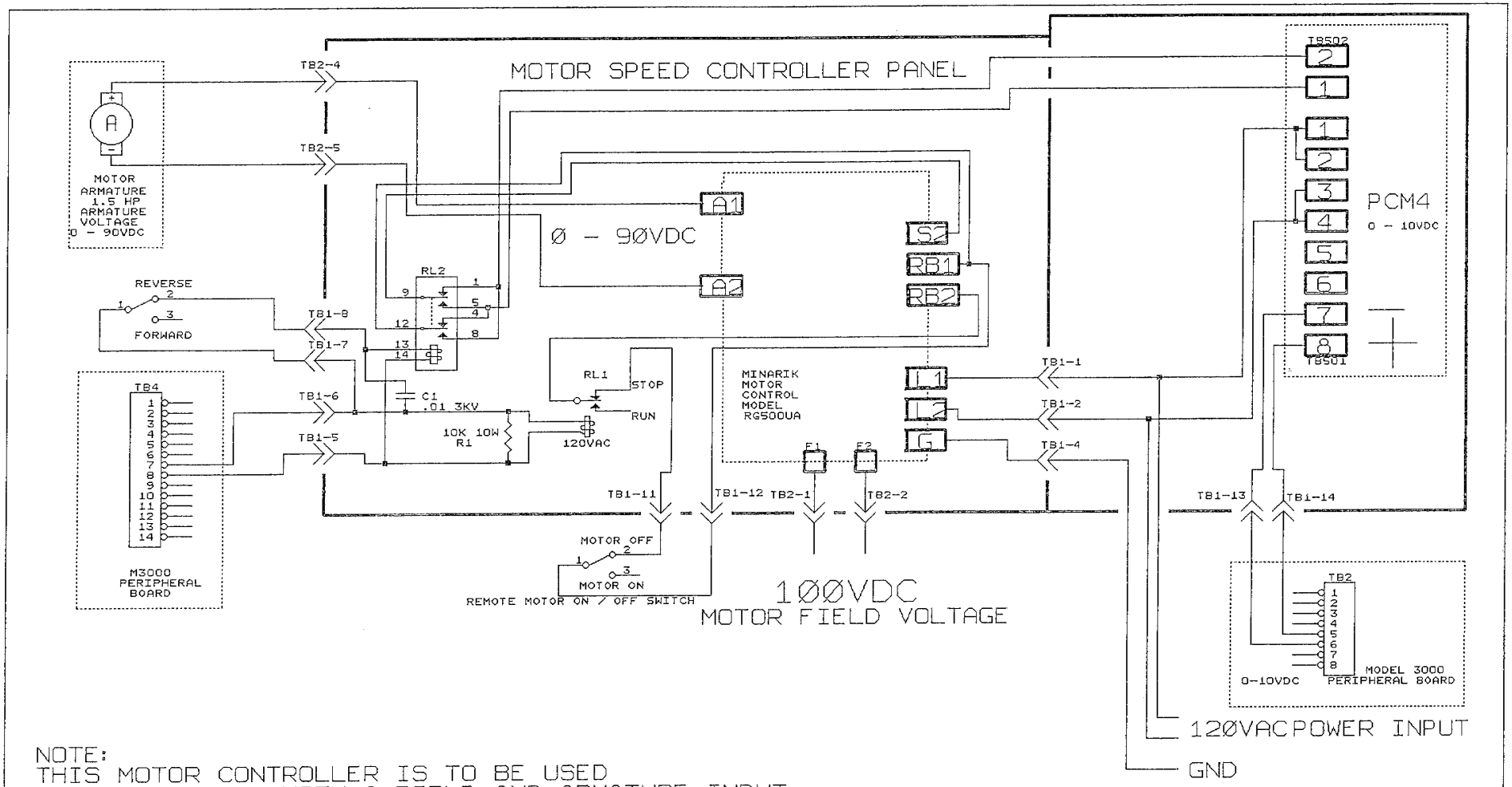

NOTE:
THIS MOTOR CONTROLLER IS TO BE USED WITH DC MOTORS WITH A FIELD AND ARMATURE INPUT.

CONNECT JUMPER BETWEEN TB1-11 AND TB1-12 IF REMOTE MOTOR ON SWITCH IS NOT USED

INTERTRON INDUDTRIES, INC.		
ASSEMBLY WIRING DIAGRAM REGENERATIVE DRIVE ARMATURE AND FIELD DC MOTORS		
Title: MODEL 3000 MOTOR SPEED CONTROL		
Size: B	Document Number: 146-010-03B	REV: B
Date: April 25, 2003	Sheet 1 of 1	

INV.B72

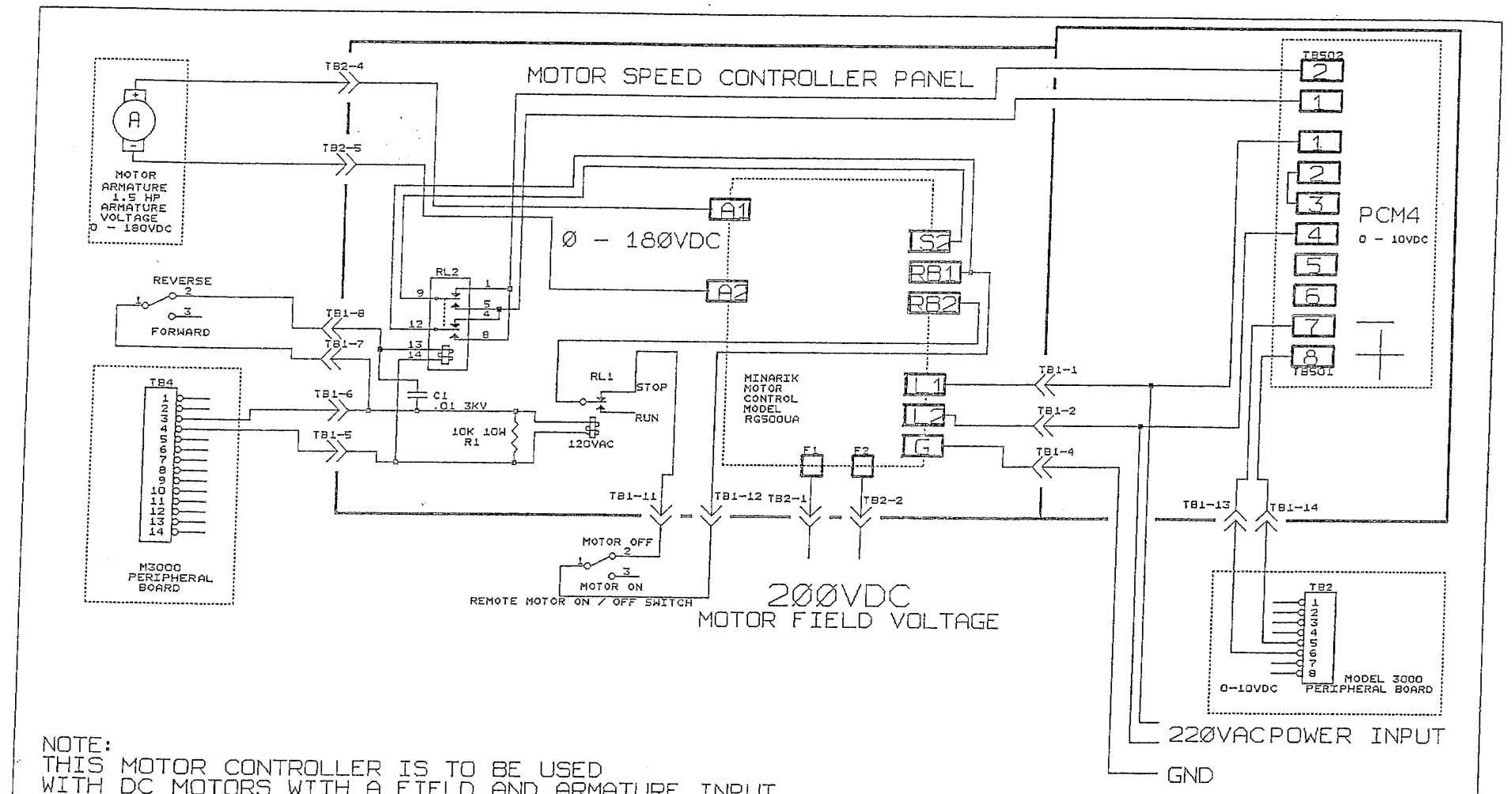

NOTE:
THIS MOTOR CONTROLLER IS TO BE USED WITH DC MOTORS WITH A FIELD AND ARMATURE INPUT.

CONNECT JUMPER BETWEEN TB1-11 AND TB1-12 IF REMOTE MOTOR ON SWITCH IS NOT USED

INTERTRON INDUDTRIES, INC.		
ASSEMBLY WIRING DIAGRAM REGENERATIVE DRIVE FOR CUSTOM SCIAKY SEAM WELDER WITH KEY LOCK		
Title: MODEL 3000 MOTOR SPEED CONTROL		
Size: B	Document Number: 146-010-04	REV: A
Date: May 22, 2002	Sheet 1 of 1	

INV.A72

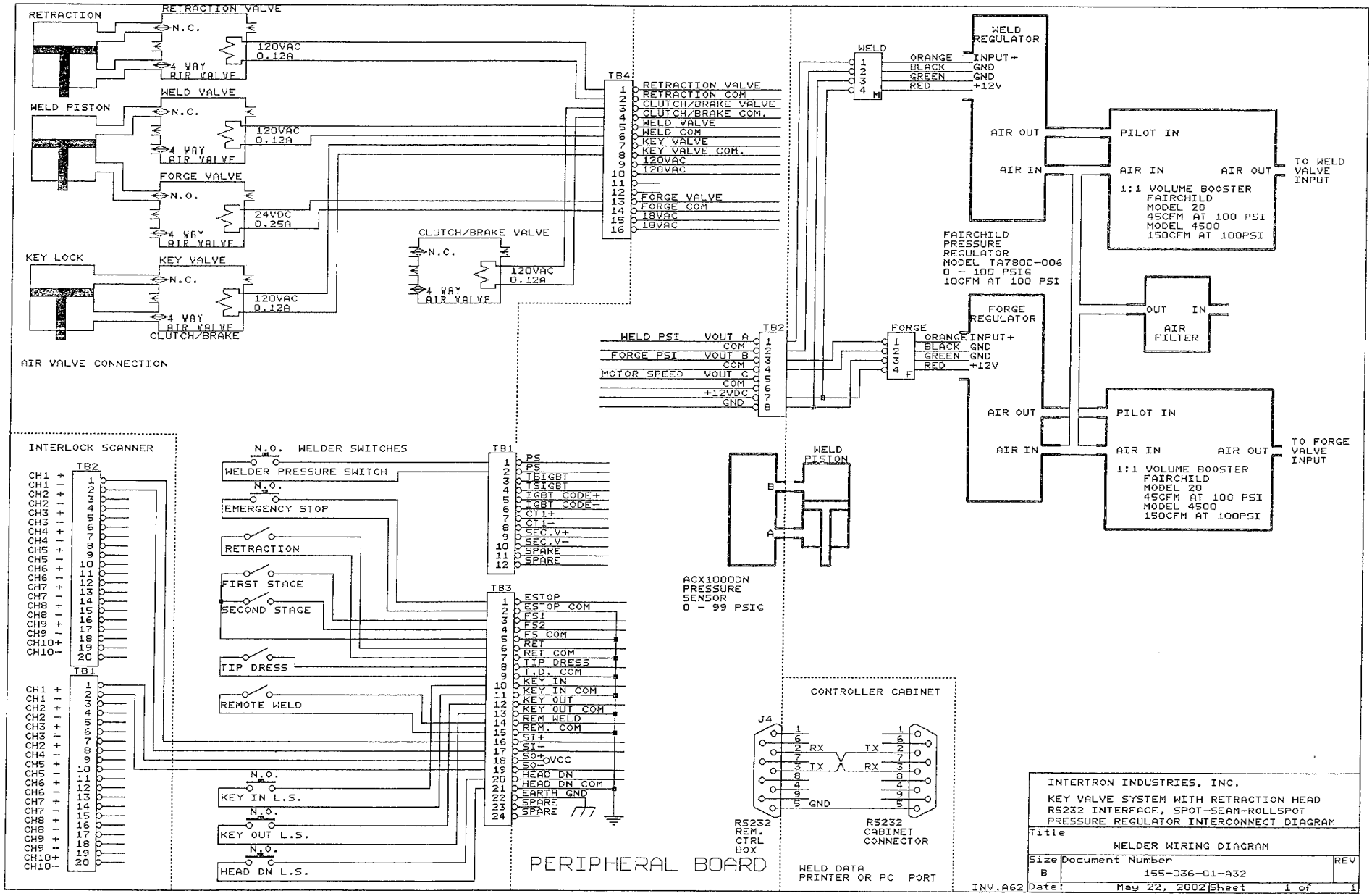
RETRACTION
RETRACTION VALVE
N.C.
120VAC
0.12A
4 WAY
AIR VALVE
WELD PISTON
WELD VALVE
FORGE VALVE
N.O.
24VDC
0.25A
KEY LOCK
KEY VALVE
CLUTCH/BRAKE VALVE
AIR VALVE CONNECTION
TB4
RETRACTION VALVE
RETRACTION COM
CLUTCH/BRAKE VALVE
CLUTCH/BRAKE COM.
WELD VALVE
WELD COM
KEY VALVE
KEY VALVE COM.
120VAC
FORGE VALVE
FORGE COM
18VAC
WELD
WELD REGULATOR
ORANGE INPUT+
BLACK GND
GREEN GND
RED +12V
AIR OUT
AIR IN
PILOT IN
TO WELD VALVE INPUT
1:1 VOLUME BOOSTER
FAIRCHILD
MODEL 20
45CFM AT 100 PSI
MODEL 4500
150CFM AT 100PSI
FAIRCHILD
PRESSURE
REGULATOR
MODEL TA7800-006
0 - 100 PSIG
10CFM AT 100 PSI
FORGE
FORGE REGULATOR
OUT IN
AIR FILTER
TB2
WELD PSI VOUT A
COM
FORGE PSI VOUT B
MOTOR SPEED VOUT C
+12VDC
GND
TO FORGE VALVE INPUT
WELD PISTON
ACX1000DN
PRESSURE
SENSOR
0 - 99 PSIG
INTERLOCK SCANNER
N.O. WELDER SWITCHES
WELDER PRESSURE SWITCH
EMERGENCY STOP
RETRACTION
FIRST STAGE
SECOND STAGE
TIP DRESS
REMOTE WELD
KEY IN L.S.
KEY OUT L.S.
HEAD DN L.S.
TB1
PS
TSIGBT
IGBT CODE+
IGBT CODE-
CT1+
CT1-
SEC.V+
SEC.V-
SPARE
TB3
ESTOP
ESTOP COM
FS1
FS2
FS COM
RET
RET COM
TIP DRESS
T.D. COM
KEY IN
KEY IN COM
KEY OUT
KEY OUT COM
REM WELD
REM. COM
SI+
SI-
SO+
SO-
+5VCC
HEAD DN
HEAD DN COM
EARTH GND
PERIPHERAL BOARD
CONTROLLER CABINET
J4
RS232
REM.
CTRL
BOX
RS232
CABINET
CONNECTOR
WELD DATA
PRINTER OR PC PORT
INTERTRON INDUSTRIES, INC.
KEY VALVE SYSTEM WITH RETRACTION HEAD
RS232 INTERFACE, SPOT-SEAM-ROLLSPOT
PRESSURE REGULATOR INTERCONNECT DIAGRAM
Title
WELDER WIRING DIAGRAM
Size B
Document Number 155-036-01-A32
REV
INV.A62
Date: May 22, 2002
Sheet 1 of 1

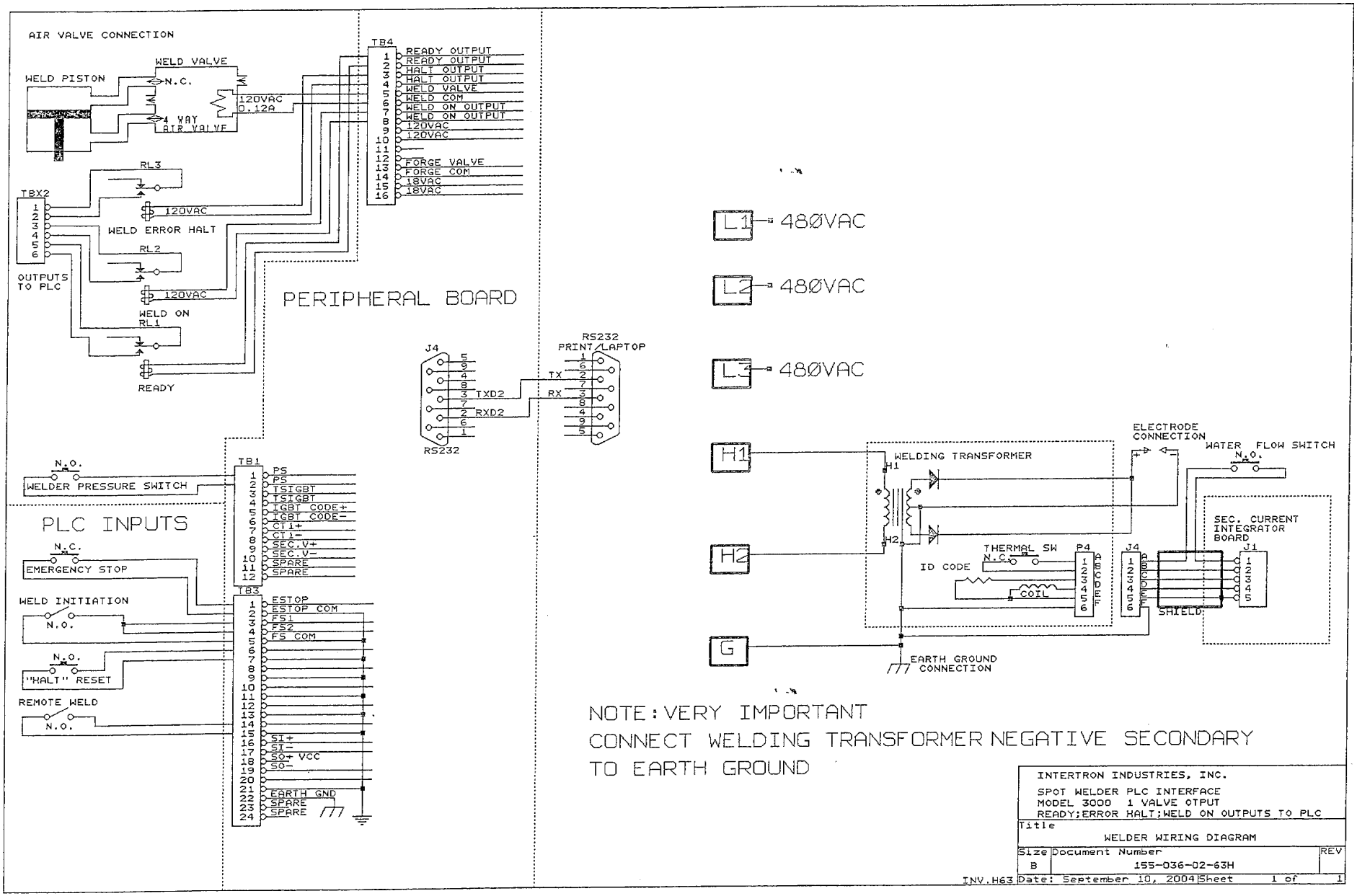

NOTE: VERY IMPORTANT
CONNECT WELDING TRANSFORMER NEGATIVE SECONDARY
TO EARTH GROUND

INTERTRON INDUSTRIES, INC.
SPOT WELDER PLC INTERFACE
MODEL 3000 1 VALVE OTPUT
READY;ERROR HALT;WELD ON OUTPUTS TO PLC

Title		
WELDER WIRING DIAGRAM		
Size	Document Number	REV
B	155-036-02-63H	
INV.H63	Date: September 10, 2004	Sheet 1 of 1

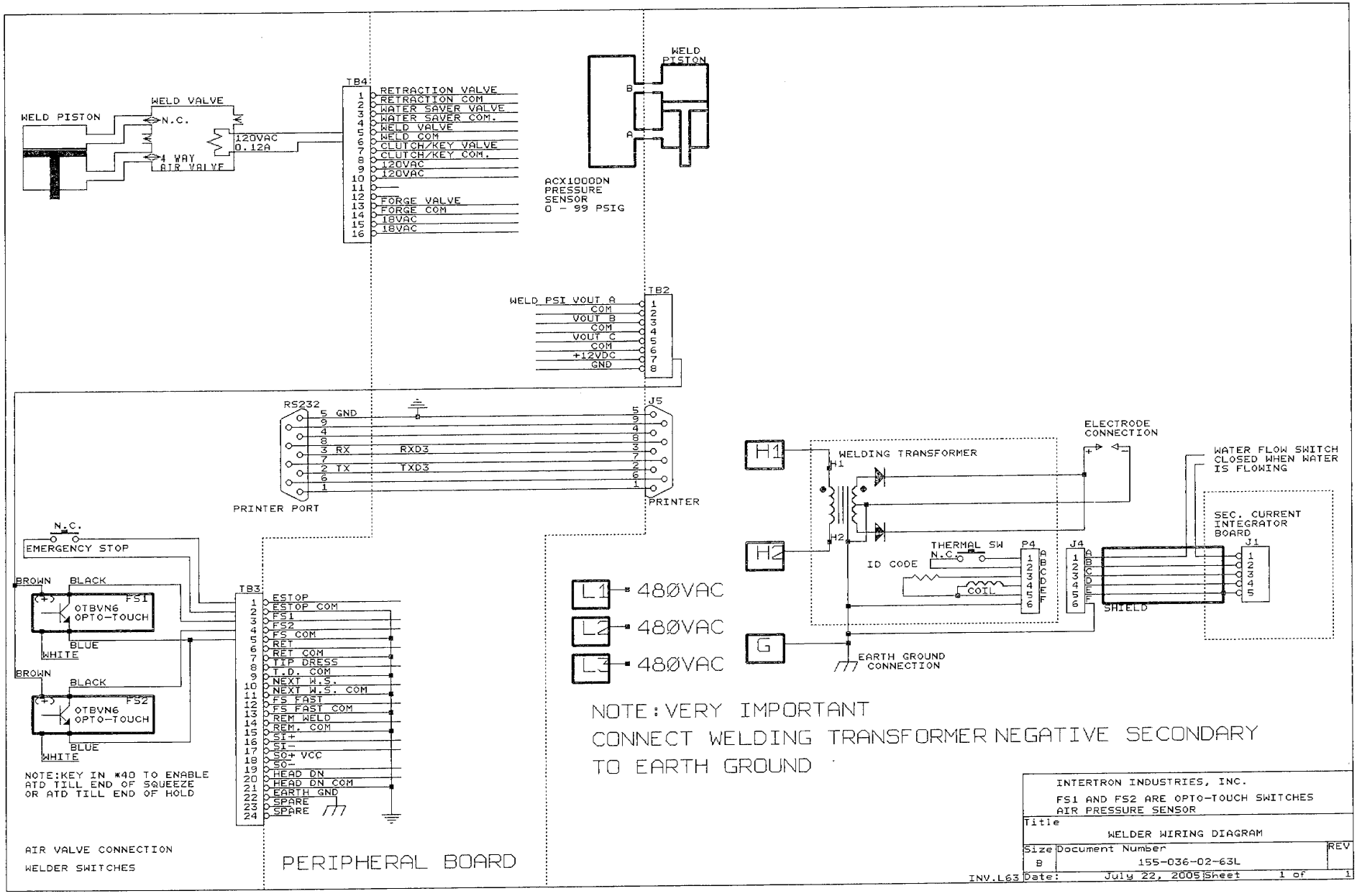
WELD VALVE
WELD PISTON
N.C.
4 WAY AIR VALVE
120VAC 0.12A
TB4
1 RETRACTION VALVE
2 RETRACTION COM
3 WATER SAVER VALVE
4 WATER SAVER COM.
5 WELD VALVE
6 WELD COM
7 CLUTCH/KEY VALVE
8 CLUTCH/KEY COM.
9 120VAC
10 120VAC
11
12 FORGE VALVE
13 FORGE COM
14 18VAC
15 18VAC
16
WELD PISTON
B
A
ACX1000DN PRESSURE SENSOR 0 - 99 PSIG
TB2
WELD PSI VOUT A
COM
VOUT B
COM
VOUT C
COM
+12VDC
GND
RS232
5 GND
3 RX
RXD3
2 TX
TXD3
PRINTER PORT
J5
PRINTER
N.C.
EMERGENCY STOP
BROWN
BLACK
FS1
OTBVN6 OPTO-TOUCH
BLUE
WHITE
BROWN
BLACK
FS2
OTBVN6 OPTO-TOUCH
BLUE
WHITE
NOTE:KEY IN *40 TO ENABLE ATD TILL END OF SQUEEZE OR ATD TILL END OF HOLD
TB3
1 ESTOP
2 ESTOP COM
3 FS1
4 FS2
5 FS COM
6 RET
7 RET COM
8 TIP DRESS
9 T.D. COM
10 NEXT W.S.
11 NEXT W.S. COM
12 FS FAST
13 FS FAST COM
14 REM WELD
15 REM. COM
16 SI+
17 SI-
18 SO+ VCC
19 SO-
20 HEAD DN
21 HEAD DN COM
22 EARTH GND
23 SPARE
24 SPARE
AIR VALVE CONNECTION
WELDER SWITCHES
PERIPHERAL BOARD
L1 480VAC
L2 480VAC
L3 480VAC
H1
H2
G
WELDING TRANSFORMER
H1
H2
ELECTRODE CONNECTION
THERMAL SW
N.C
ID CODE
COIL
P4
J4
J1
SHIELD
WATER FLOW SWITCH CLOSED WHEN WATER IS FLOWING
SEC. CURRENT INTEGRATOR BOARD
EARTH GROUND CONNECTION
NOTE: VERY IMPORTANT
CONNECT WELDING TRANSFORMER NEGATIVE SECONDARY
TO EARTH GROUND
INTERTRON INDUSTRIES, INC.
FS1 AND FS2 ARE OPTO-TOUCH SWITCHES
AIR PRESSURE SENSOR
Title
WELDER WIRING DIAGRAM
Size B
Document Number 155-036-02-63L
REV
INV.L63
Date: July 22, 2005
Sheet 1 of 1

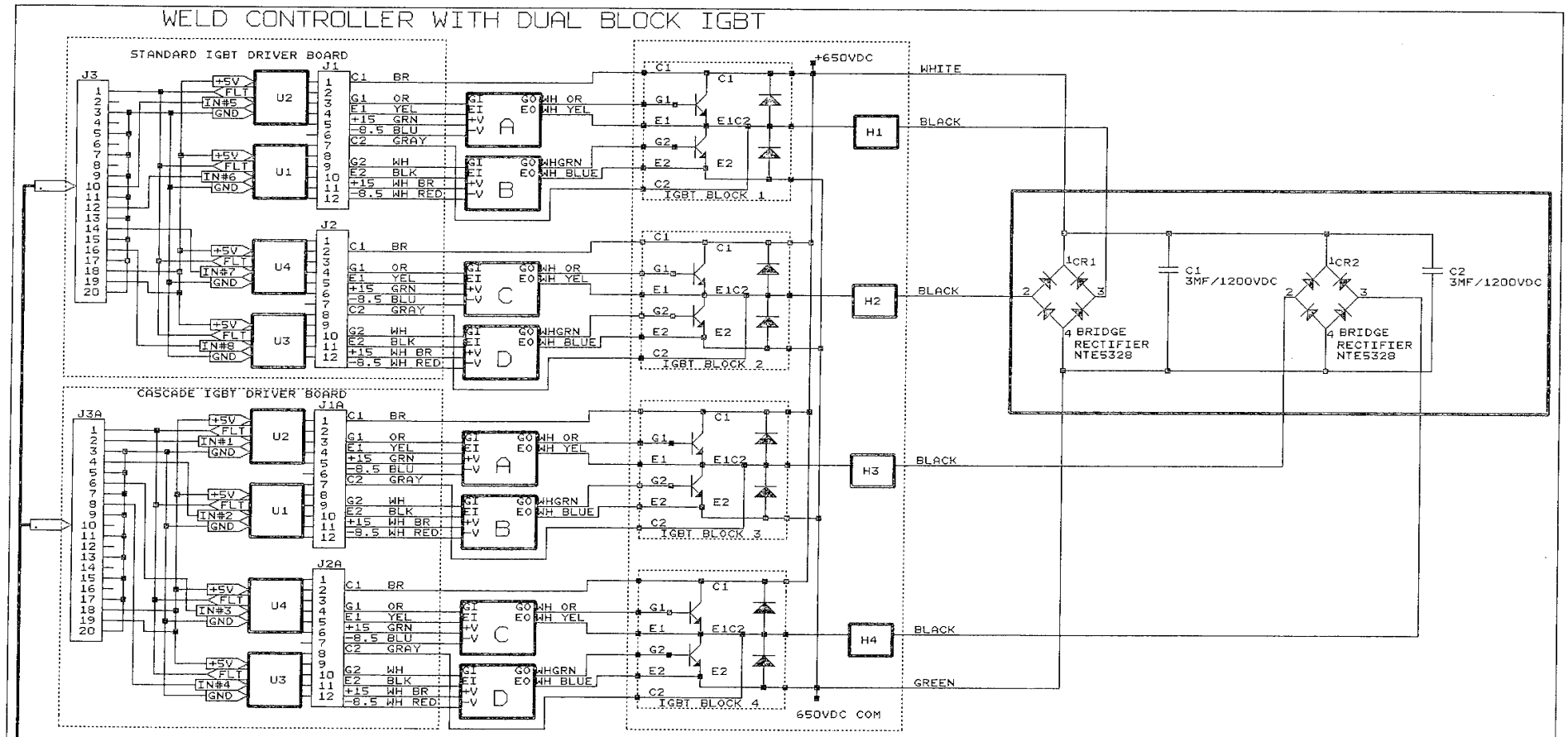

INTERTRON INDUSTRIES, INC.		
IGBT AND DRIVER BOARD INTERFACE DUAL IGBT BLOCK		
Title MODEL 3000 CASCADE DRIVER SPIKE SUPRESSOR		
Size B	Document Number 155-38-04	REV
Date: August 16, 2006	Sheet 1 of 1	

INV.P99